N-Channel, 650V, 12A, POWER MOSFET

Features

- ✧ New technology for high voltage device
- ✧ Low on-resistance and low conduction losses
- ✧ Small package : ITO-220AB
- ✧ Ultra Low Gate Charge cause lower driving requirements

V_{DS} (V)	Typical $R_{DS(on)}$ (Ω)
650	0.67 @ V_{GS}=10V

Applications

- ✧ LED power supplies
- ✧ Cell Phone Charger
- ✧ Standby Power

Mechanical Data

- ✧ Case : Molded plastic body
- ✧ Terminals : Solder plated, solderable per MIL-STD-750,Method 2026
- ✧ Polarity : As marked
- ✧ RoHS/WEEE Compliant

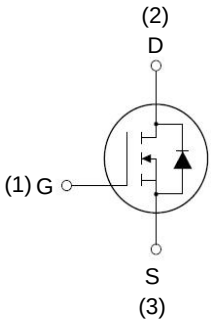

Circuit Diagram

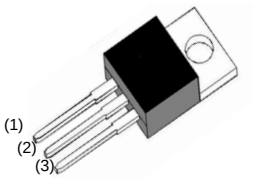

ITO-220AB

Absolute Maximum Rating at T_A = 25 °C, unless otherwise specified

Parameter		Symbol	Value	Units
Drain-Source Voltage (VGS=0V)		V_{DS}	650	V
Gate-Source Voltage (VDS=0V) AC (f>1 Hz)		V_{GS}	±30	V
Continuous Drain Current	T_C=25℃	$I_{D\ (DC)}$	12	A
Power Dissipation	T_C=25℃	P_D	51	W
Thermal Resistance，Junction-to-Case（Maximum）		$R_{\theta JC}$	2.6	℃/W
Thermal Resistance，Junction-to-Ambient （Maximum）		$R_{\theta JA}$	62.5	℃/W
Junction Temperature		T_J	150	℃
Storage Temperature		T_{STG}	-55~ +150	℃

OVREG Semiconductor (xi'an) Co.,Ltd.

Electrical Characteristics at T_A = 25 °C, unless otherwise specified

PARAMETER		SYMBOL	TEST CONDITIONS	MIN	TYP	MAX	UNIT
OFF CHARACTERISTICS							
Drain-Source Breakdown Voltage		BV_{DSS}	V_{GS}=0V, I_D=250μA	650	693		V
Drain-Source Leakage Current		I_{DSS}	V_{DS}=650V, V_{GS}=0V		0.08	0.1	μA
Gate- Source Leakage Current	Forward	I_{GSS}	V_G=30V, V_{DS}=0V		0.11	80	nA
	Reverse		V_{GS}=-30V, V_{DS}=0V		0.11	-80	nA
ON CHARACTERISTICS							
Gate Threshold Voltage		$V_{GS(TH)}$	V_{DS}=V_{GS}, I_D=250μA	2.0		4.0	V
Static Drain-Source On-State Resistance		$R_{DS(ON)}$[3]	V_{GS}=10V, I_D=6A		0.67	0.804	Ω
DYNAMIC CHARACTERISTICS							
Input Capacitance		C_{ISS}	V_{DS}=25V, V_{GS}=0V, f=1.0 MHz		1480		pF
Output Capacitance		C_{OSS}			200		pF
Reverse Transfer Capacitance		C_{RSS}			25		pF
SWITCHING CHARACTERISTICS							
Turn-On Delay Time		$t_{D(ON)}$	V_{DD} =300V, I_D =12A, R_G =25Ω (Note 1, 2)		30		ns
Turn-On Rise Time		t_R			115		ns
Turn-Off Delay Time		$t_{D(OFF)}$			95		ns
Turn-Off Fall Time		t_F			85		ns
Total Gate Charge		Q_G	V_{DS}=480V, I_D=12A, V_{GS}=10V (Note 1, 2)		42		nC
Gate-Source Charge		Q_{GS}			8.6		nC
Gate-Drain Charge		Q_{GD}			21		nC
DRAIN-SOURCE DIODE CHARACTERISTICS AND MAXIMUM RATINGS							
Drain-Source Diode Forward Voltage		V_{SD}	V_{GS} = 0 V, I_S = 12A			1.4	V
Maximum Continuous Drain-Source Diode Forward Current		I_S				12	A
Maximum Pulsed Drain-Source Diode Forward Current		I_{SM}				48	A
Reverse Recovery Time		t_{rr}	V_{GS}=0V, I_S=12A, dI_F/dt =100 A/μs (Note 1)		570		ns
Reverse Recovery Charge		Q_{RR}			5.5		μC

Notes: 1. Pulse Test: Pulse width ≤ 300μs, Duty cycle ≤ 2%.

2. Essentially independent of operating temperature.

3. $R_{DS(ON)}$ CP test results, typical, is 0.67Ω @V_{GS}=10V, I_D=1.0A.

OVREG Semiconductor (xi'an) Co.,Ltd.

Typical Characteristics at T_A = 25 °C, unless otherwise specified

On-Resign Characteristics

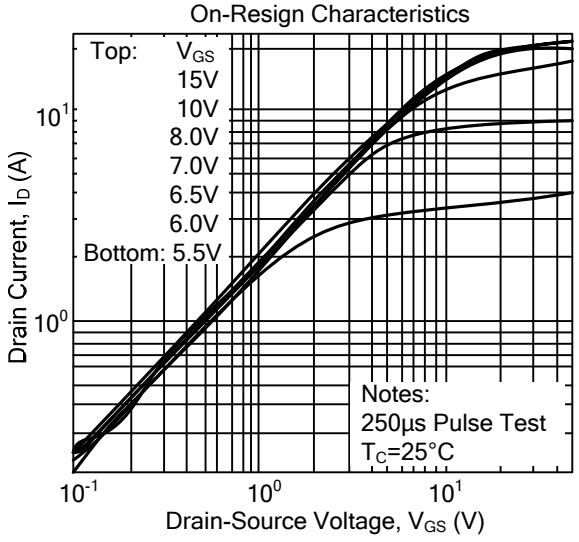

Transfer Characteristics

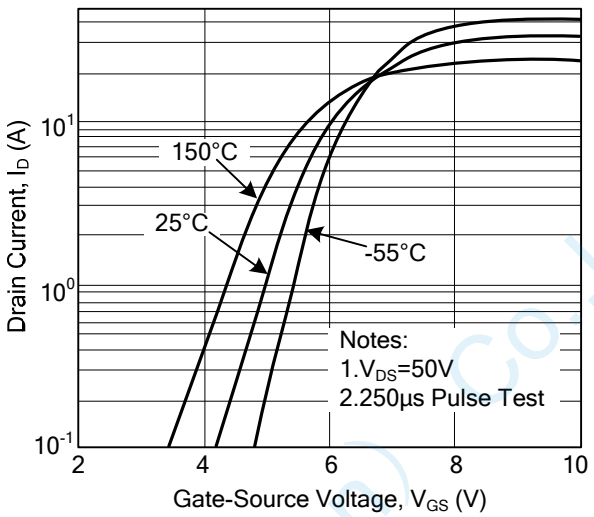

On-Resistance Variation vs.Drain Current and Gate Voltage

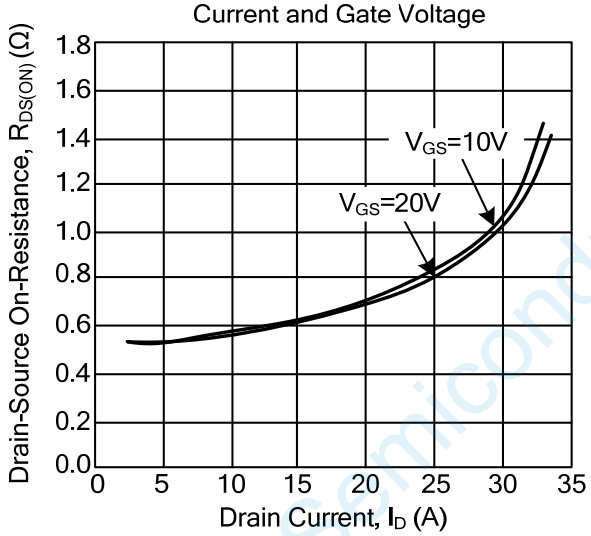

Body Diode Forward Voltage Variation vs. Source Current and Temperature

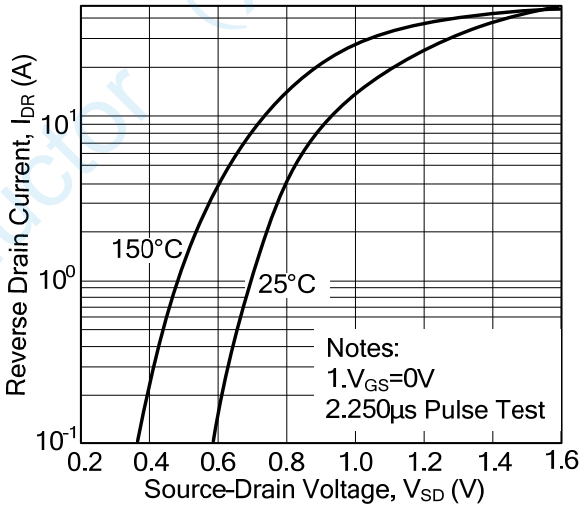

Capacitance Characteristics

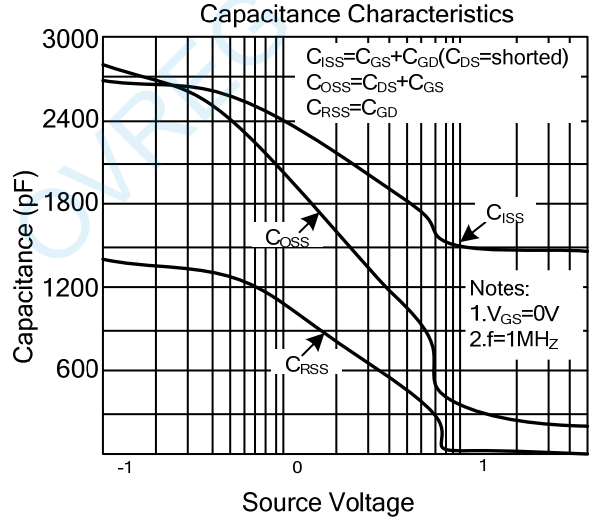

Gate Charge Characteristics

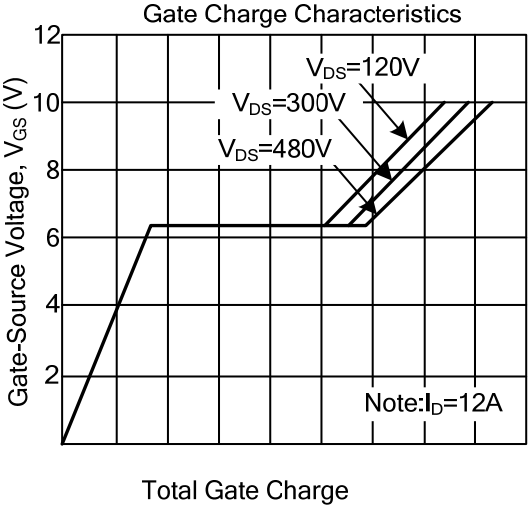

OVREG Semiconductor (xi'an) Co.,Ltd.

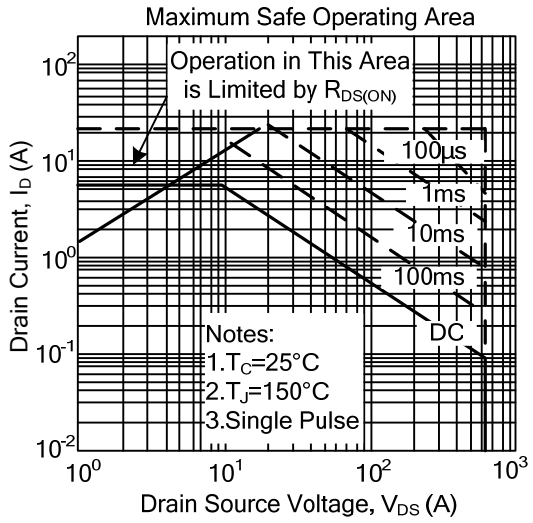

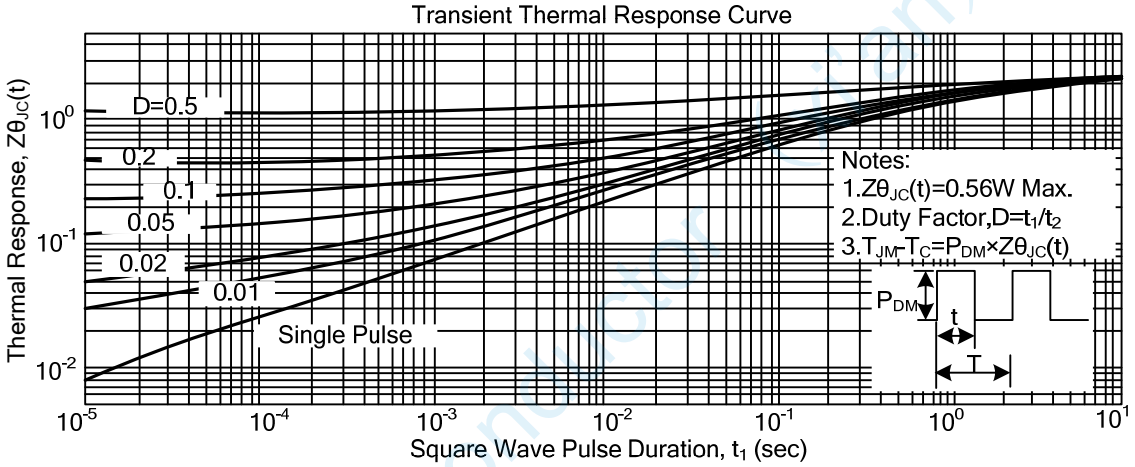

OVREG Semiconductor (xi'an) Co.,Ltd.

TEST CIRCUITS AND WAVEFORMS

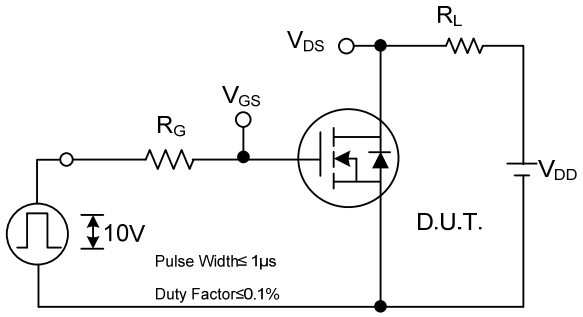

Switching Test Circuit

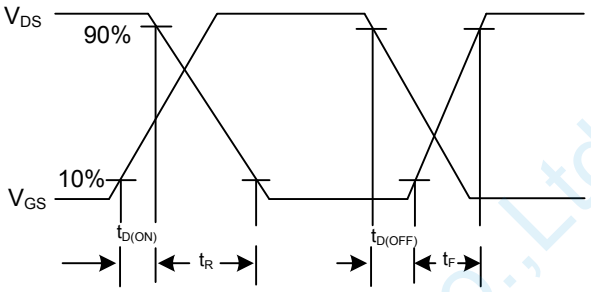

Switching Waveforms

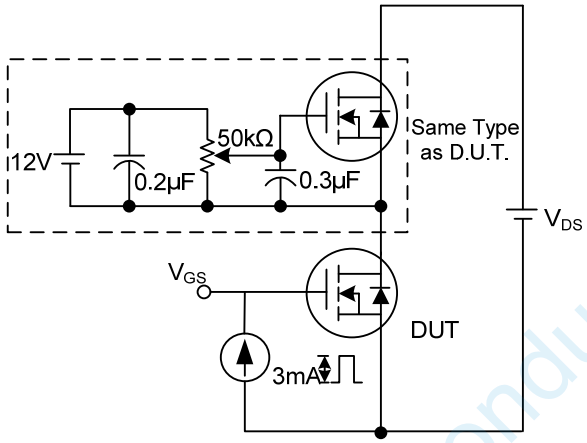

Gate Charge Test Circuit

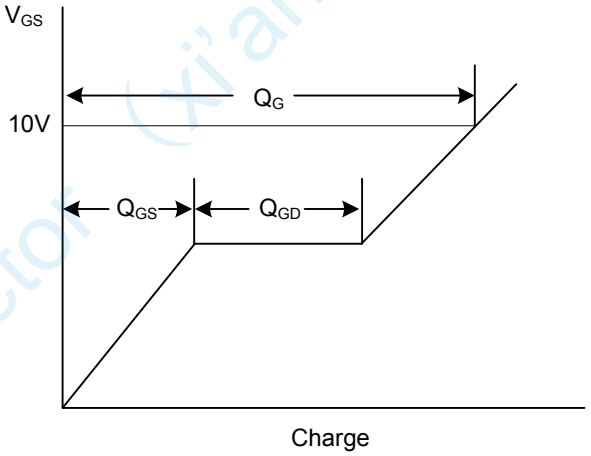

Gate Charge Waveform

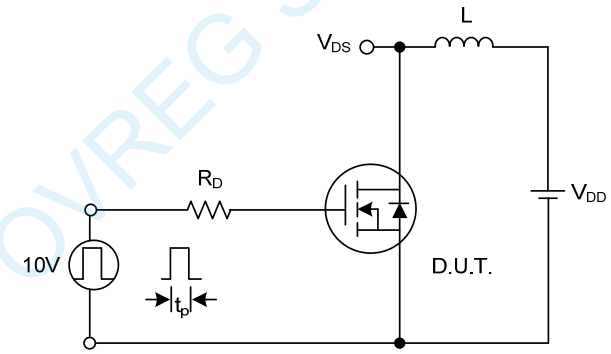

Unclamped Inductive Switching Test Circuit

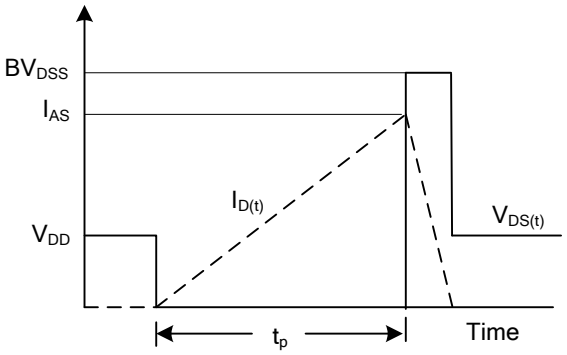

Unclamped Inductive Switching Waveforms

OVREG Semiconductor (xi'an) Co.,Ltd.

Package Information

ITO-220AB

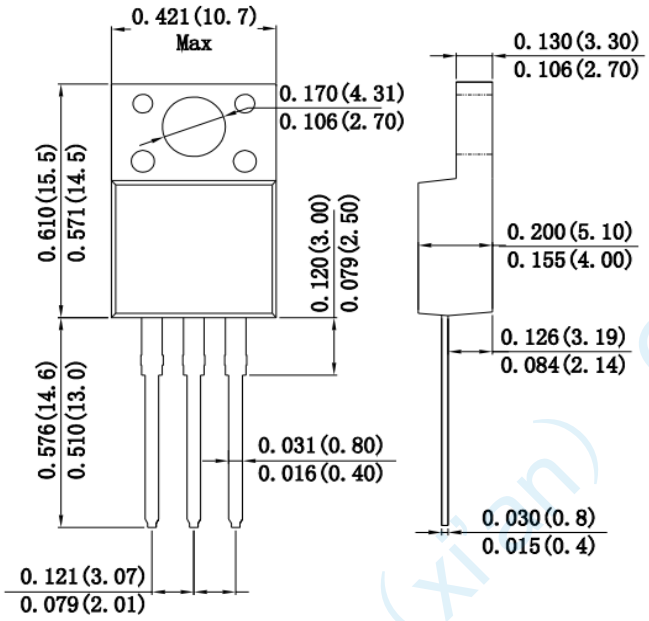

Suggested Soldering Temperature Profile

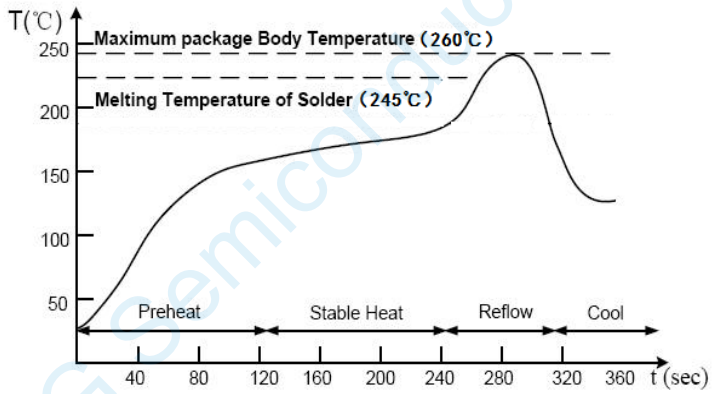

Note

- Recommended reflow methods: IR, vapor phase oven, hot air oven, wave solder.
- The device can be exposed to a maximum temperature of 260°C for 10 seconds.
- Devices can be cleaned using standard industry methods and solvents.
- If reflow temperatures exceed the recommended profile, devices may not meet the performance requirements.

Ordering Information

Package	Tube (mm)	Q'TY/Tube (Kpcs)	Box Size (mm)	QTY/Box (Kpcs)	Carton Size (mm)	Q'TY/Carton (Kpcs)
ITO-220AB	525*31.9*6.4	0.05	545*150*45	1.0	575*245*170	5.0

OVREG Semiconductor (xi'an) Co.,Ltd.