Single P-Channel, -30V, -11.4A, Power MOSFET

Features

- ✧ High density cell design for Low $R_{DS(on)}$
- ✧ Green device available
- ✧ Small package : DFN3030
- ✧ Low gate charge

V_{DS} (V)	Typical $R_{DS(on)}$ (mΩ)
-30	38@ V_{GS}=-4.5V
	22@ V_{GS}=-10V

Applications

- ✧ High current load applications
- ✧ Load switch for portable devices
- ✧ Battery Switch

Mechanical Data

- ✧ UL Flame Rating : UL94V-0
- ✧ RoHS/WEEE Compliant

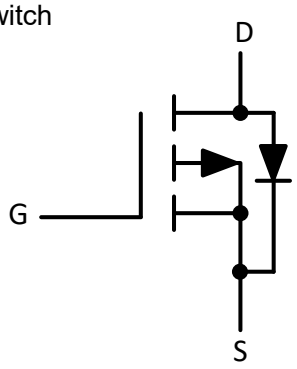

Circuit Diagram

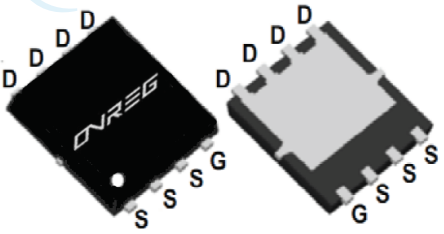

DFN3030

Absolute Maximum Rating at T_A = 25 °C, unless otherwise specified

Parameter	Symbol	Value	Unit
Drain-Source Voltage	V_{DS}	-30	V
Gate-Source Voltage	V_{GS}	± 20	V
Drain Current (T_j = 150 °C) T_c = 25 °C T_c = 70 °C	I_D	-11.4 -9.1	A
Peak Drain Current, Pulsed	I_{DM}	-60	A
Single-Pulse Avalanche Current (L= 0.1 mH)	I_{AS}	-20	A
Single-Pulse Avalanche Energy (L= 0.1 mH)	E_{AS}	20	mJ
Power Dissipation T_c = 25 °C T_c = 70 °C T_a = 25 °C T_a = 70 °C	P_D	5 3.2 2.5 [1) 2)] 1.6 [1) 2)]	W
Operating Junction and Storage Temperature Range	T_J, T_{stg}	- 55 to + 150	℃

Electrical Characteristics at T_A = 25 °C, unless otherwise specified

Parameter	Symbol	Min.	Typ.	Max.	Unit
STATIC PARAMETERS					
Drain-Source Breakdown Voltage at I_D = -250 µA	BV_{DSS}	-30	-	-	V
Drain-Source Leakage Current at V_{DS} = -30 V	I_{DSS}	-	-0.02	-1	µA
Gate Leakage Current at V_{GS} = ± 20 V	I_{GSS}	-	-	± 100	nA
Gate-Source Threshold Voltage at V_{DS} = V_{GS}, I_D = -250 µA	$V_{GS(th)}$	-1	-1.5	-2.5	V
Drain-Source On-State Resistance at V_{GS} = -10 V, I_D = -9.1 A at V_{GS} = -4.5 V, I_D = -6.9 A	$R_{DS(on)}$	- -	22 38	26 42	mΩ
DYNAMIC PARAMETERS					
Forward Transconductance at V_{DS} = -10 V, I_D = -9.1 A	g_{FS}	-	10	-	S
Gate Resistance at V_{GS} = 0 V, V_{DS} = 0 V, f = 1 MHz	R_g	-	5	-	Ω
Input Capacitance at V_{DS} = -15 V, V_{GS} = 0 V, f = 1 MHz	C_{iss}	-	1306	-	pF
Output Capacitance at V_{DS} = -15 V, V_{GS} = 0 V, f = 1 MHz	C_{oss}	-	139	-	pF
Reverse Transfer Capacitance at V_{DS} = -15 V, V_{GS} = 0 V, f = 1 MHz	C_{rss}	-	109	-	pF
Total Gate Charge at V_{DS} = -15 V, V_{GS} = -10 V, I_D = -10 A at V_{GS} =-4.5 V, V_{DS} = -15 V, I_D = -10 A	Q_g	- -	22 11	- -	nC
Gate-Source Charge at V_{DS} = -15 V, V_{GS} = -10 V, I_D = -10 A	Q_{gs}	-	3.9	-	nC
Gate-Drain Charge at V_{DS} = -15 V, V_{GS} = -10 V, I_D = -10 A	Q_{gd}	-	3.9	-	nC
Turn-On Delay Time at V_{DD} = -15 V, V_{GS} = -10 V, I_D = -6 A, R_G = 3.3 Ω, R_L = 2.5 Ω	$t_{d(on)}$	-	4	-	ns
Turn-On Rise Time at V_{DD} = -15 V, V_{GS} = -10 V, I_D = -6 A, R_G = 3.3 Ω, R_L = 2.5 Ω	t_r	-	13	-	ns
Turn-Off Delay Time at V_{DD} = -15 V, V_{GS} = -10 V, I_D = -6 A, R_G = 3.3 Ω, R_L = 2.5 Ω	$t_{d(off)}$	-	71	-	ns
Turn-Off Fall Time at V_{DD} =-15 V, V_{GS} =-10 V, I_D = -6 A, R_G = 3.3 Ω, R_L = 2.5 Ω	t_f	-	9	-	ns
Body-Diode PARAMETERS					
Drain-Source Diode Forward Voltage at I_S = -2 A, V_{GS} = 0 V	V_{SD}	-	-0.72	-1.2	V
Body-Diode Continuous Current	I_S	-		-11.4	A
Body-Diode Continuous Current, Pulsed	I_{SM}	-	-	-60	A
Body Diode Reverse Recovery Time at I_S = -6 A, di/dt = 100 A/µs	t_{rr}	-	12	-	ns
Body Diode Reverse Recovery Charge at I_S = -6 A, di/dt = 100 A/µs	Q_{rr}	-	3.9	-	nC

Thermal Characteristics

Parameter	Symbol	Max.	Unit
Thermal Resistance from Junction to Ambient [1)2)]	$R_{\theta JA}$	50	°CW

Notes:

1) Surface mounten on 1" x 1" FR4 board .

2) Maximum under Steady State Conditions is 85 °C/W .

OVREG Semiconductor (Xi'an) Co.,Ltd.

Typical Characteristics at T_A = 25 °C, unless otherwise specified

Fig. 1 Typical Output Characteristics

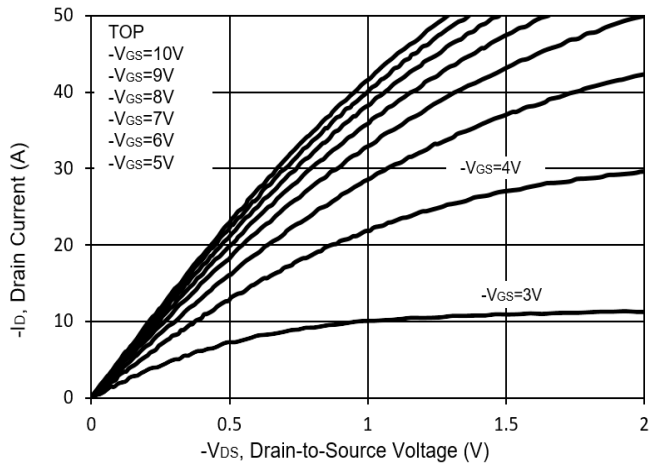

Fig. 2 Typical Transfer Characteristics

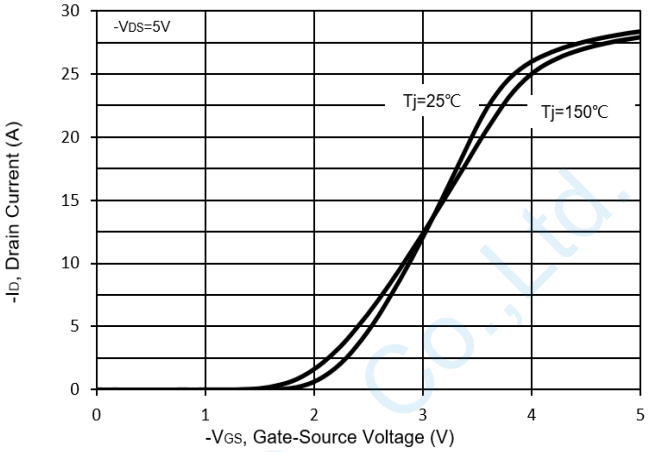

Fig. 3 on-Resistance vs. Gate to Source Voltage

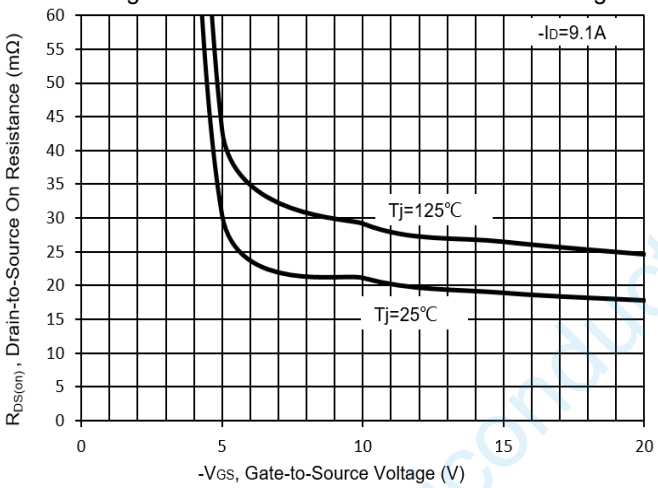

Fig. 4 on-Resistance vs.T_j

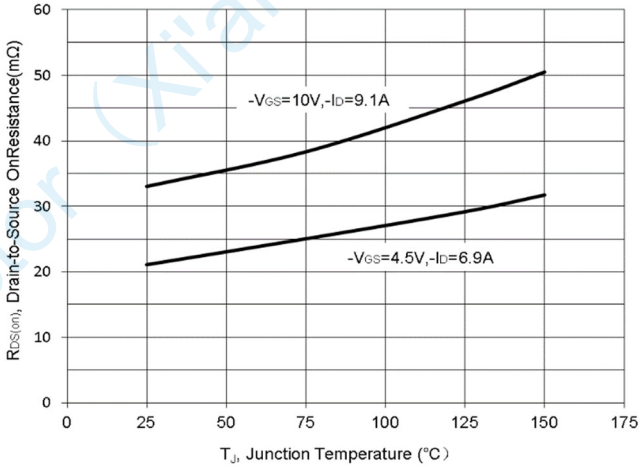

Fig. 5 Drain Source vs. on-Resistance

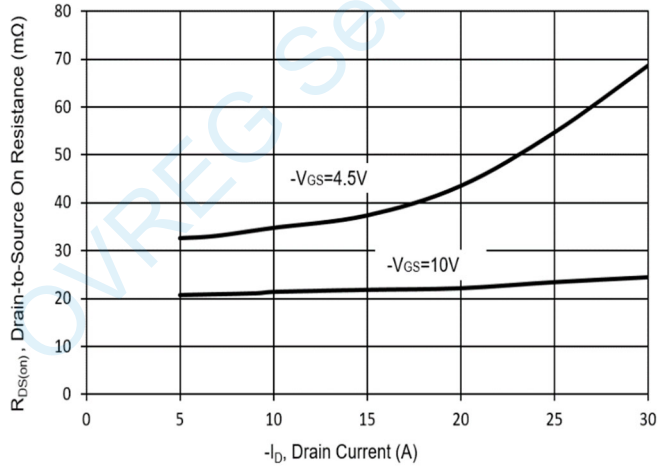

Fig. 6 Typical Body Diode Forward Characteristics

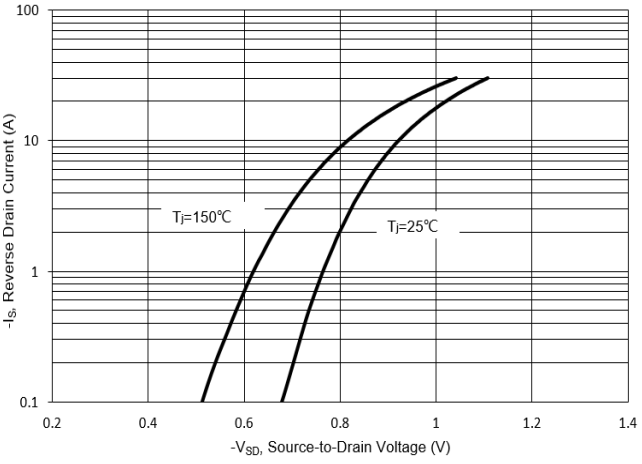

OVREG Semiconductor (Xi'an) Co.,Ltd.

Typical Characteristics at T_A = 25 °C, unless otherwise specified

Fig. 7 $V_{(BR)DSS}$ vs. Junction Temperature

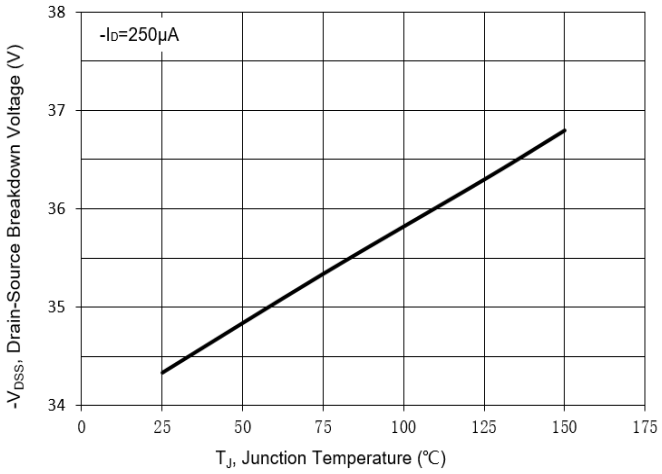

Fig. 8 Gate Threshold Variation vs. T_j

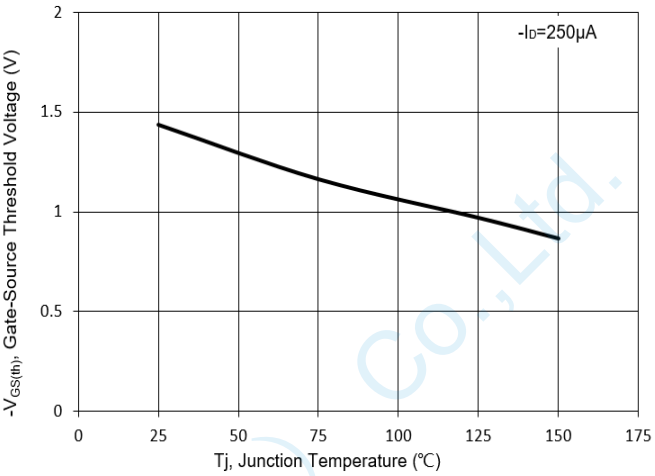

Fig. 9 Typical Junction Capacitance

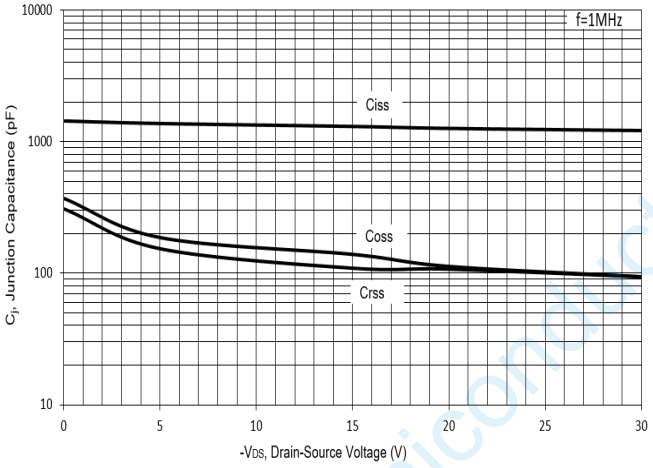

Fig. 10 Gate Charge

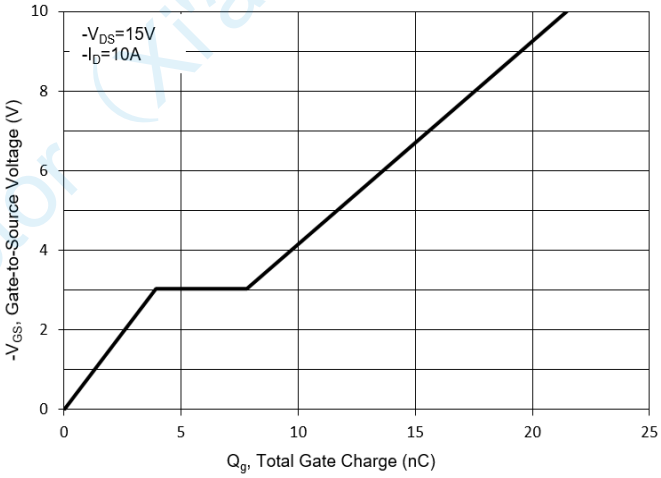

Fig. 11 Drain-Source Leakage Current

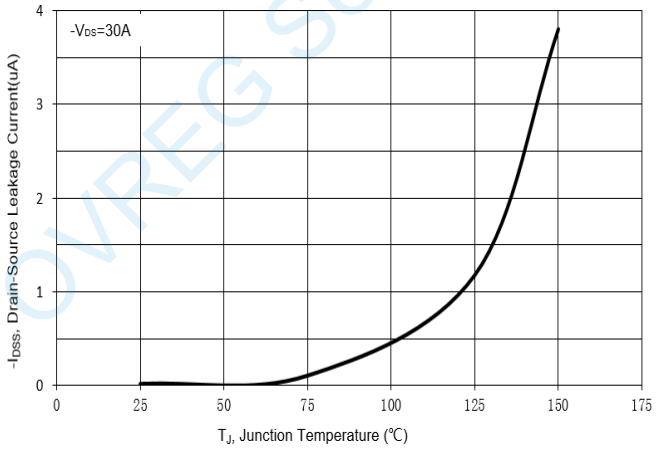

Fig. 12 Safe Operation Area

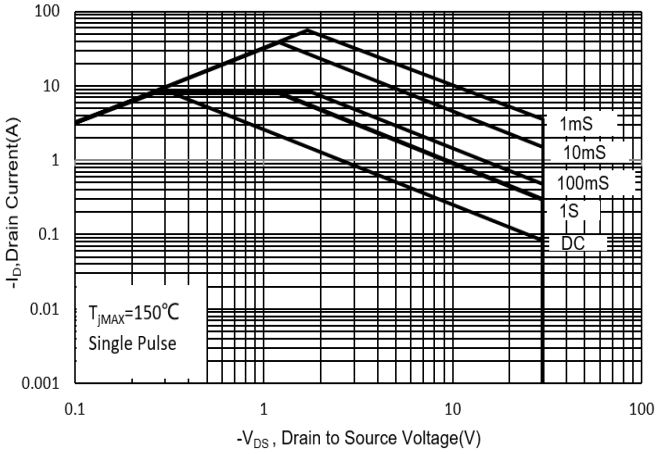

OVREG Semiconductor (Xi'an) Co.,Ltd.

TEST CIRCUIT

Fig.1-1 Switching times test circuit

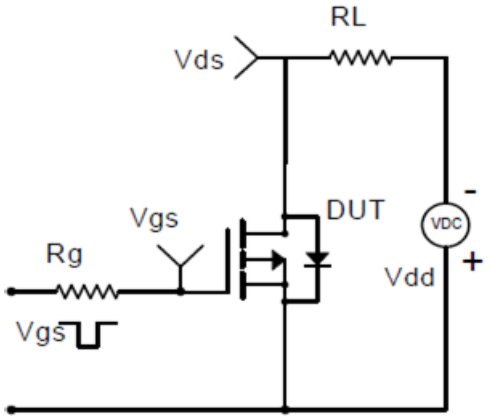

Fig.1-2 Switching Waveform

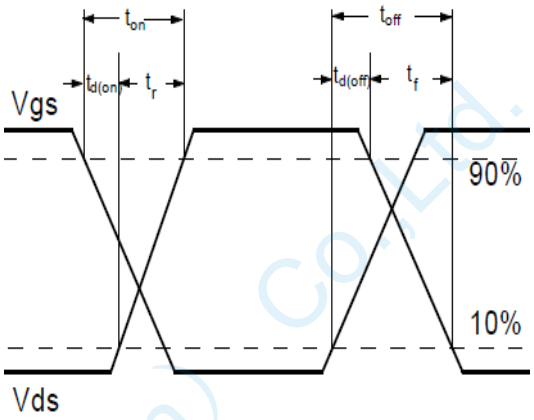

Fig.2-1 Gate charge test circuit

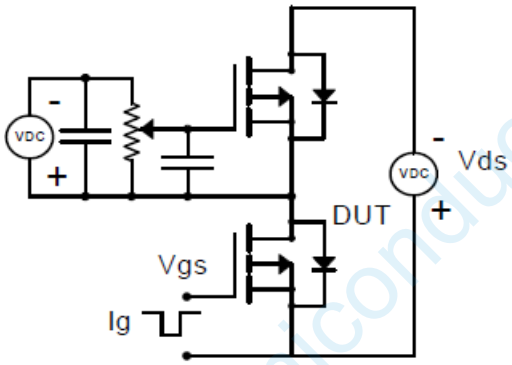

Fig.2-2 Gate charge waveform

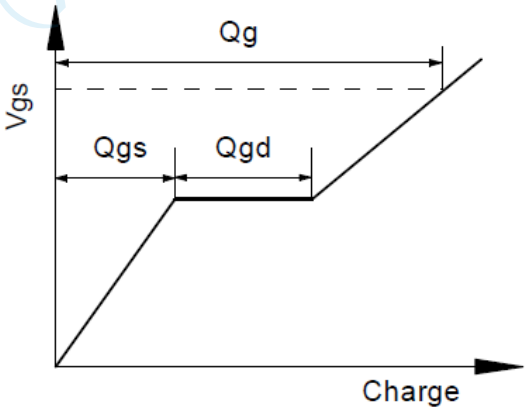

Fig.3-1 Avalanche test circuit

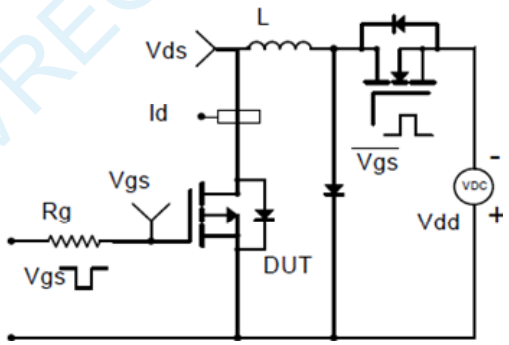

Fig.3-2 Avalanche waveform

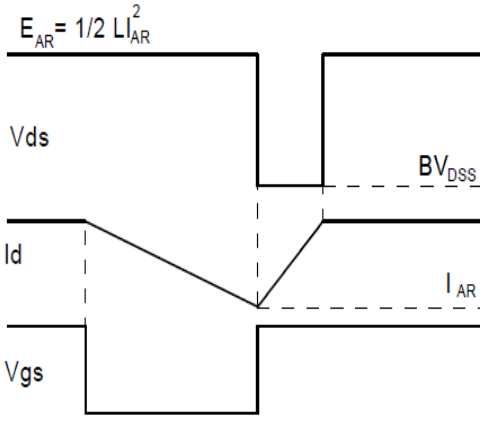

OVREG Semiconductor (Xi'an) Co.,Ltd.

Package Information

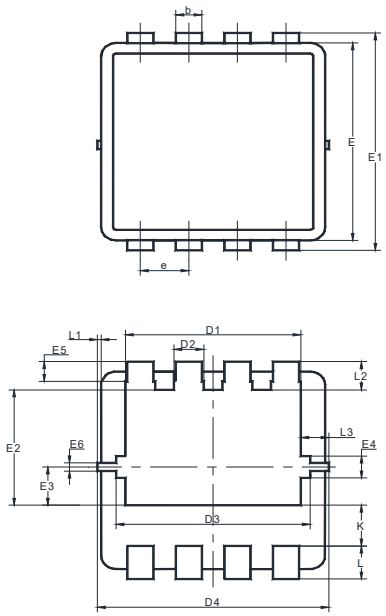

SYMBOL	MIN	MAX
A	0.70	0.90
A1	0	0.05
b	0.24	0.35
c	0.10	0.25
D1	2.40	2.60
D2	0.30	0.50
D3	2.50	2.70
D4	3.00	3.20
E	2.90	3.10
E1	3.10	3.30
E2	1.65	1.85
E3	0.48	0.68
E4	0.23	0.43
E5	0.20	0.40
E6	0.15	0.25
e	0.15	0.25
K	0.52	0.72
L	0.30	0.50
L1	0	0.10
L2	0.33	0.53
L3	0.275	0.475
θ	8°	12°

Recommend PCB Layout

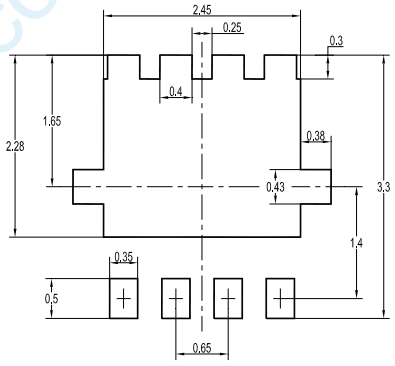

Marking

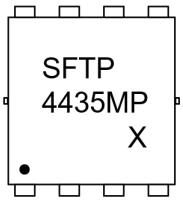

X:Date Code

Ordering Information

Part number	Material	Type	Reel size	MOQ
OVM30P40D3	GREEN	T/R	13 inch	5k/reel

OVREG Semiconductor (Xi'an) Co.,Ltd.