# Single P-Channel, -30V, -35A, Power MOSFET

## Features

- ✧ High density cell design for Low $R_{DS(on)}$
- ✧ Green device available
- ✧ Small package : PDFN5x6
- ✧ Low gate charge

| $V_{DS}$ (V) | Typical $R_{DS(on)}$ (mΩ) |
|---|---|
| -30 | 12.8 @ $V_{GS}$=-4.5V |
| | 8.8 @ $V_{GS}$=-10V |

## Applications

- ✧ High current load applications
- ✧ Load switch for portable devices
- ✧ Battery Switch

## Mechanical Data

- ✧ UL Flame Rating : UL94V-0
- ✧ RoHS/WEEE Compliant

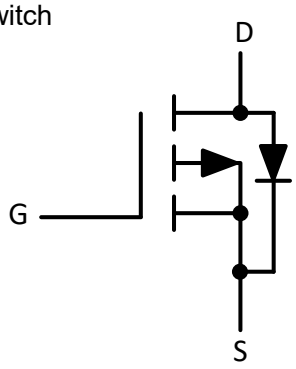


Circuit Diagram

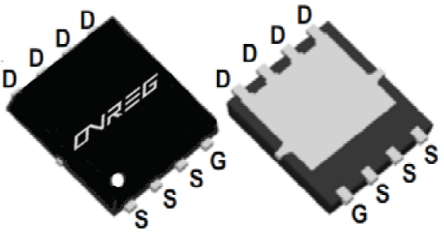


PDFN5x6

## Absolute Maximum Rating at $T_A$ = 25 °C, unless otherwise specified

| Parameter | | Symbol | Value | Units |
|---|---|---|---|---|
| Drain-Source Voltage | | $V_{DS}$ | -30 | V |
| Gate-Source Voltage | | $V_{GS}$ | ±20 | V |
| Continuous Drain Current | $T_C$=25 ℃ | $I_D$ | -35 | A |
| | $T_C$=100℃ | | -23 | |
| Power Dissipation | $T_C$=25 ℃ | $P_D$ | 31 | W |
| Thermal Resistance from Junction to Ambient | | $R_{\theta JA}$ | 50.7 | ℃/W |
| Junction Temperature | | $T_J$ | 150 | ℃ |
| Storage Temperature | | $T_{STG}$ | -55~ +150 | ℃ |

OVREG Semiconductor (xi'an) Co.,Ltd.

# Electrical Characteristics at $T_A$ = 25 °C, unless otherwise specified

| Symbol | Parameter | Test Conditions | Min | Typ | Max | Units |
|---|---|---|---|---|---|---|
| **Off Characteristics** | | | | | | |
| $BV_{DSS}$ | Drain-Source Breakdown Voltage | $V_{GS}$ = 0 V, $I_D$ = -250 μA | -30 | | | V |
| $I_{DSS}$ | Zero Gate Voltage Drain Current | $V_{DS}$ = -30 V, $V_{GS}$ = 0 V | | | -1 | μA |
| $I_{GSSF}$ | Gate Leakage Current, Forward | $V_{GS}$ = 20 V, $V_{DS}$ = 0 V | | | 100 | nA |
| $I_{GSSR}$ | Gate Leakage Current, Reverse | $V_{GS}$ = -20 V, $V_{DS}$ = 0 V | | | -100 | nA |
| **On Characteristics** | | | | | | |
| $V_{GS(TH)}$ | Gate Threshold voltage | $V_{DS}$ = $V_{GS}$, $I_D$ = -250 uA | -1 | -1.5 | -2 | V |
| $R_{DS(On)}$ | Drain-Source on-state resistance | $V_{GS}$ = -10 V, $I_D$ = -12 A | | 8.8 | 11.3 | mΩ |
| | | $V_{GS}$ = -4.5 V, $I_D$ = -8 A | | 12.8 | 17 | mΩ |
| $g_{FS}$ | Forward Transconductance | $V_{DS}$=-5V, $I_D$ =-10A | 20 | | | S |
| **Dynamic Characteristics** | | | | | | |
| $C_{iss}$ | Input capacitance | VDS=-15V, VGS=0V, F=1.0Mhz | | 2800 | | pF |
| $C_{oss}$ | Output capacitance | | | 346 | | pF |
| $C_{rss}$ | Reverse transfer capacitance | | | 320 | | pF |
| **Switching Characteristics** | | | | | | |
| $t_{d(on)}$ | Turn On Delay Time | $V_{DS}$ = -15 V, ID = -20 A, $V_{GS}$ = -10 V, $R_G$ = 2.5 Ω (Note 3, 4) | | 8 | | ns |
| $t_r$ | Rising Time | | | 32.6 | | ns |
| $t_{d(off)}$ | Turn Off Delay Time | | | 89 | | ns |
| $t_f$ | Fall Time | | | 14.2 | | ns |
| $Q_g$ | Total Gate Charge | $V_{DS}$ = -15 V, ID = -20 A, $V_{GS}$ = -10 V (Note 3, 4) | | 52 | | nC |
| $Q_{gs}$ | Gate-Source Charge | | | 7.8 | | nC |
| $Q_{gd}$ | Gate-Drain Charge | | | 11.5 | | nC |
| **Drain-Source Diode Characteristics and Maximum Ratings** | | | | | | |
| $I_S$ | Maximum Continuous Drain-Source Diode Forward Current | | | | -35 | A |
| $I_{SM}$ | Maximum Pulsed Drain-Source Diode Forward Current | | | | -140 | A |
| $V_{SD}$ | Diode Forward Voltage | $V_{GS}$= 0 V, $I_S$ = -10A | | | 1.2 | V |

**Notes:**
1. Repetitive Rating : Pulse width limited by maximum junction temperature
2. L = 0.5 mH, $V_{DD}$ = -15V, $V_{GS}$ = -10 V, $R_G$ = 25 Ω, Starting $T_j$ = 25°C
3. $I_{SD}$ ≤ -20A, di/dt = 100A/us, $V_{DD}$ ≤ $BV_{DSS}$, Staring $T_j$ =25°C
4. Pulse Test : Pulse width ≤ 300us, Duty cycle ≤ 2%
5. Essentially independent of operating temperature

OVREG Semiconductor (xi'an) Co.,Ltd.

# Typical Characteristics at $T_A$ = 25 °C, unless otherwise specified

Fig.1 Power Dissipation Derating Curve

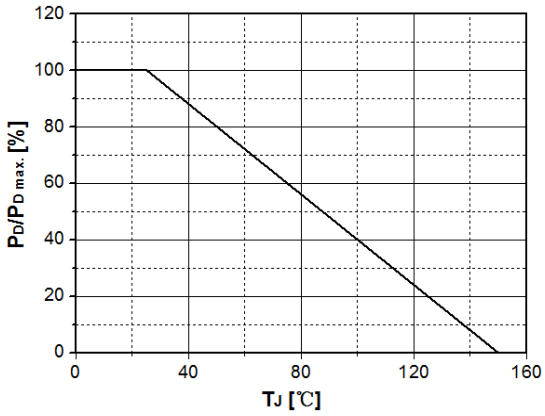


Fig.2 Avalanche Energy Derating Curve vs. Junction Temperature

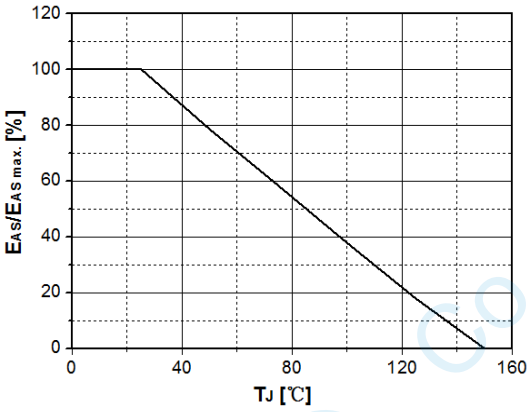


Fig.3 Typical Output Characteristics

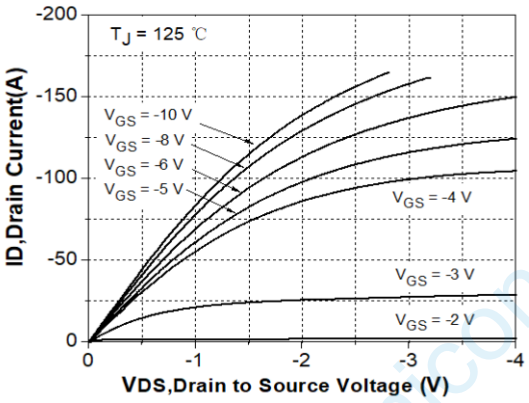


Fig. 4 Transconductance vs. Drain Current

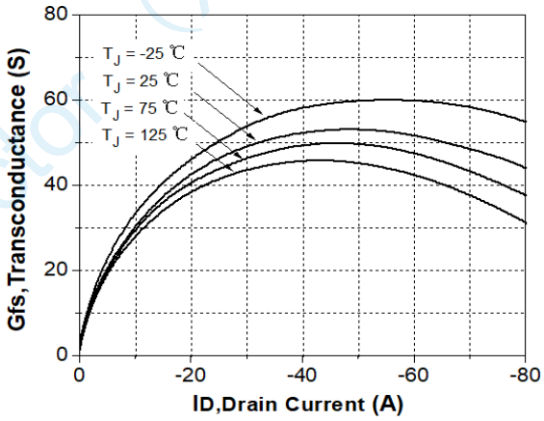


Fig.5 Typical Transfer Characteristics

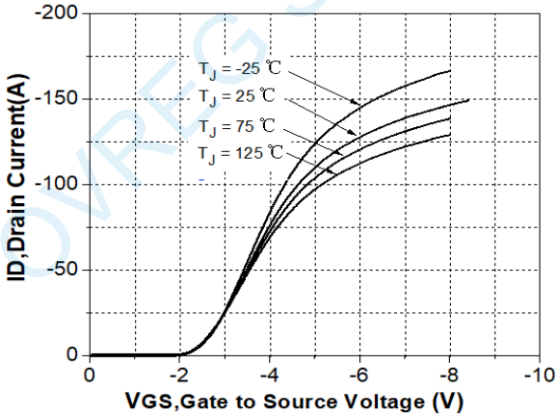


Fig. 6 State Resistance vs. Drain Current @-25℃

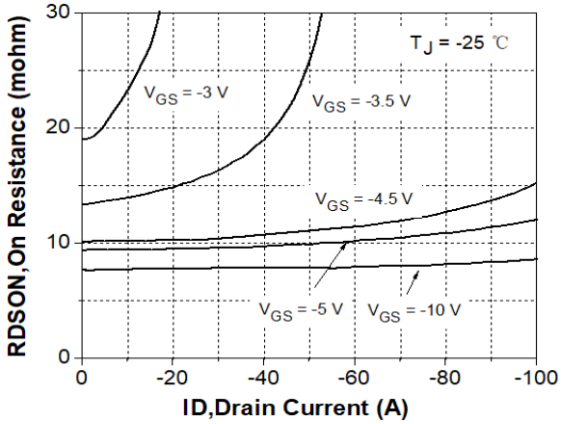


OVREG Semiconductor (xi'an) Co.,Ltd.

# Typical Characteristics at $T_A$ = 25 °C, unless otherwise specified

Fig.7 State Resistance vs. Drain Current @25℃

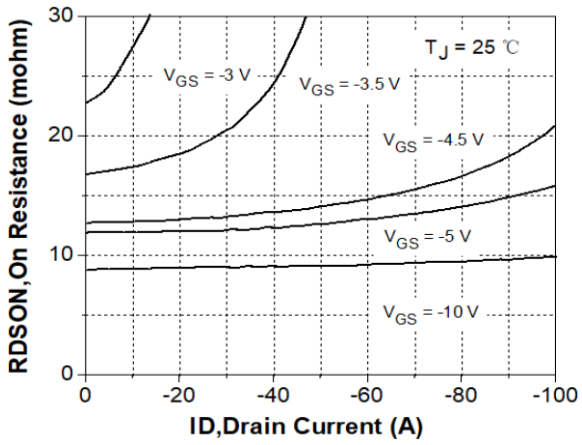


Fig. 8 State Resistance vs. Drain Current @125℃

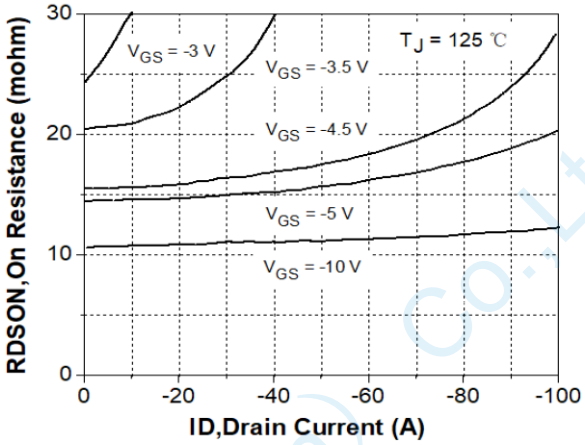


Fig.9 Typical Capacitance vs. Drain Source Voltage

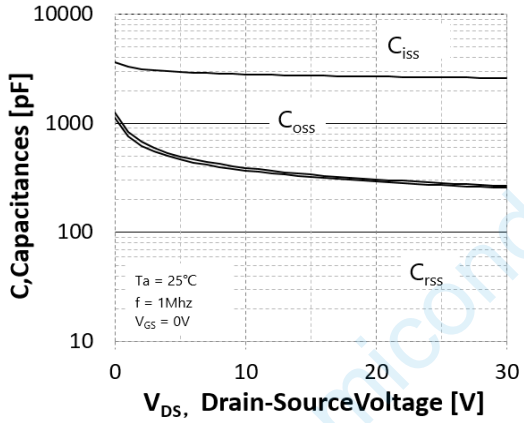


Fig.10 Dynamic Input Characteristics

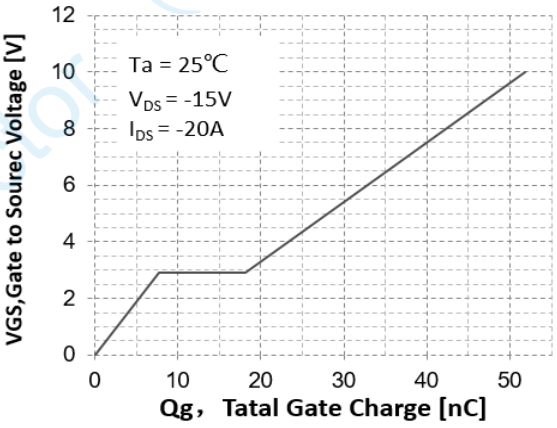


Fig.11 Breakdown Voltage
vs. Junction Temperature

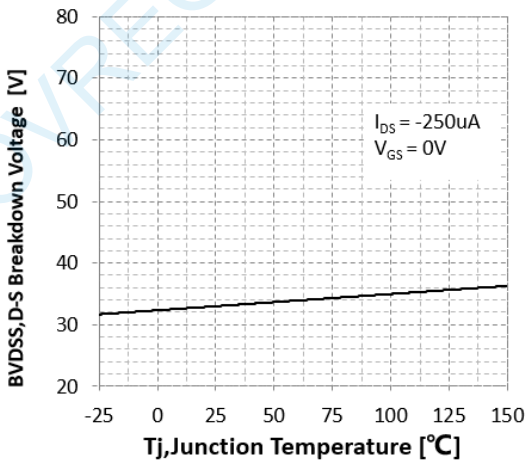


Fig. 12 Gate Threshold Voltage
vs. Junction Temperature

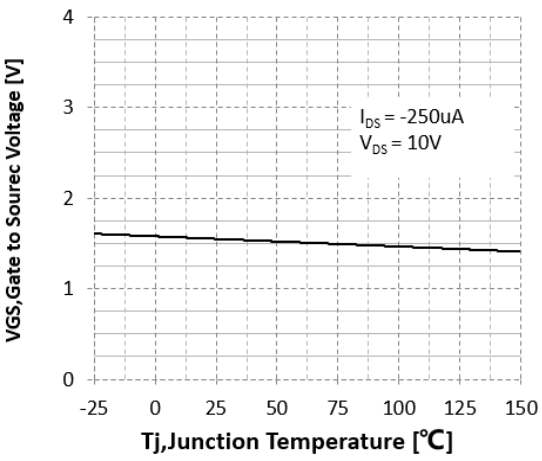


OVREG Semiconductor (xi'an) Co.,Ltd.

# Typical Characteristics at $T_A$ = 25 °C, unless otherwise specified

Fig.13 On-Resistance Variation vs. Junction Temperature

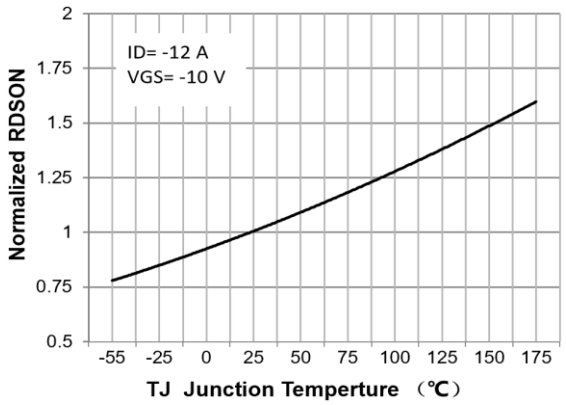


Fig.14 Maximum Drain Current vs. Case Temperature

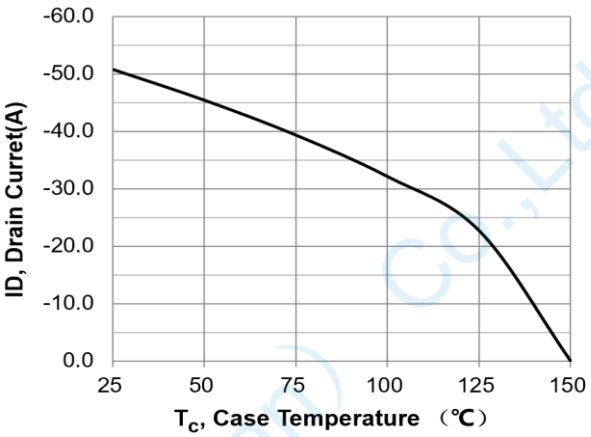


Fig.15 Body Diode Forward Voltage Vs Reverse Drain Current

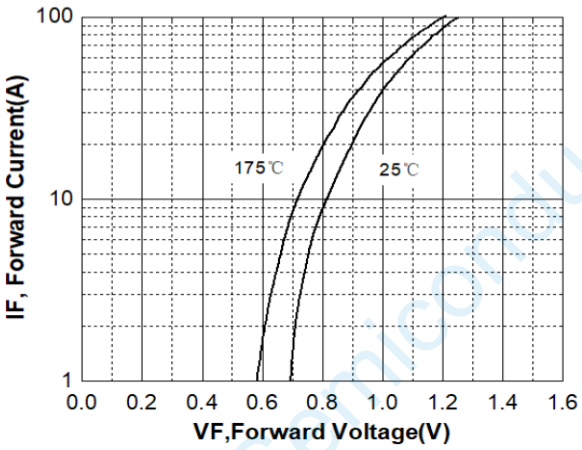


OVREG Semiconductor (xi'an) Co.,Ltd.

## Typical Characteristics at TA = 25 °C, unless otherwise specified

Fig.16 Safe Operating Area

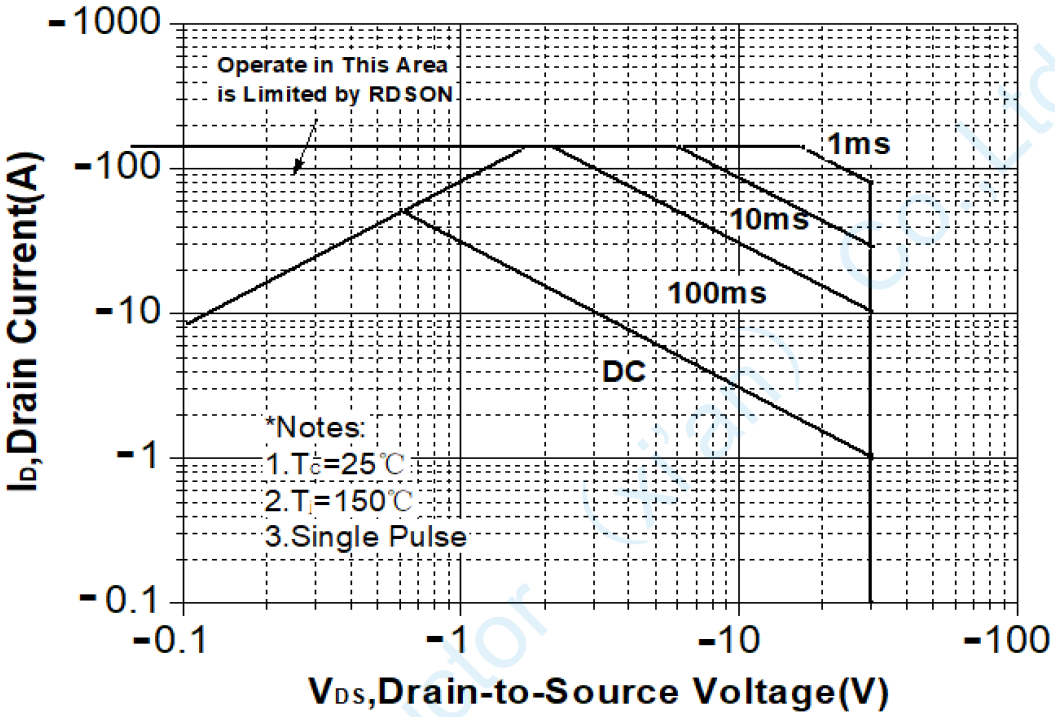


Fig. 17 Transient Thermal Response Curve

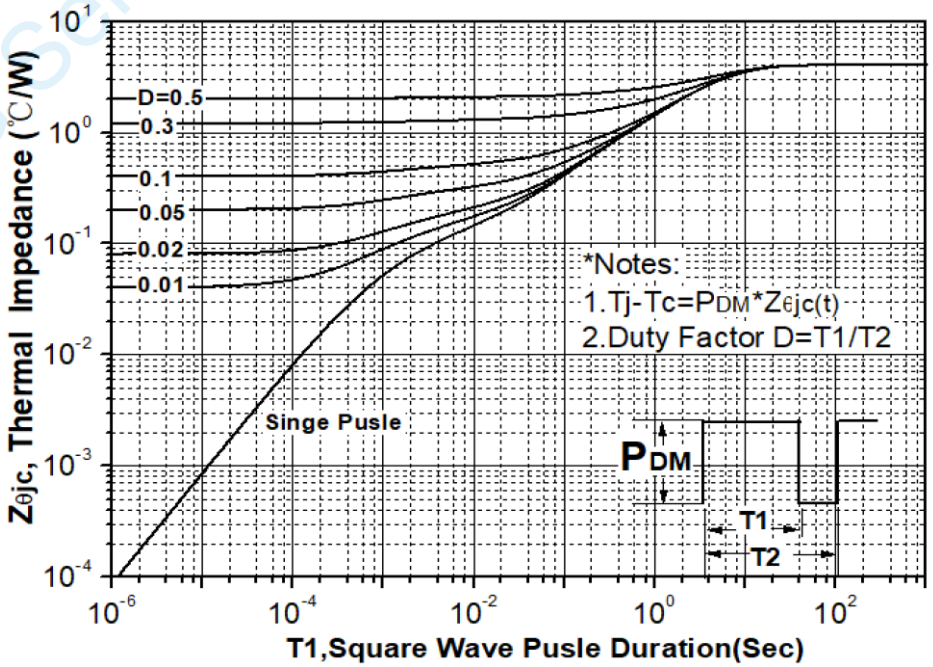


OVREG Semiconductor (xi'an) Co.,Ltd.

# TEST CIRCUIT

Gate Charge Test Circuit & Waveform

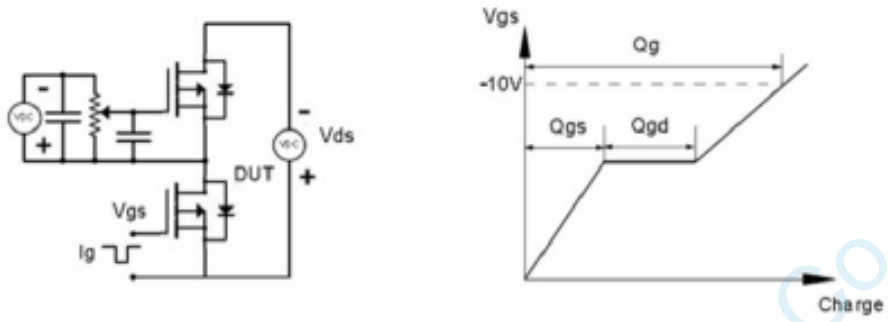


Resistive Switching Test Circuit & Waveforms

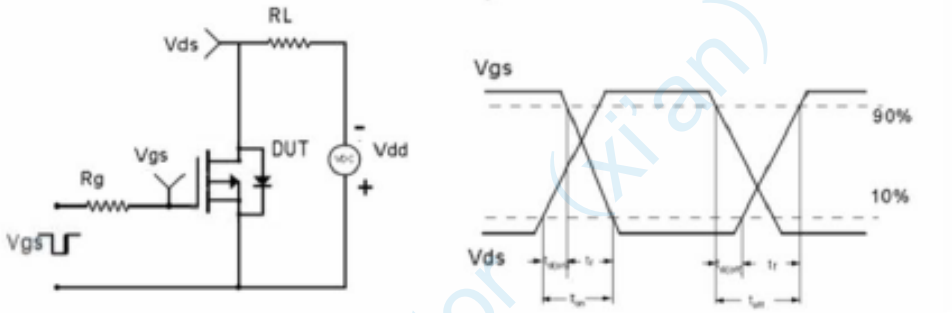


Unclamped Inductive Switching (UIS) Test Circuit & Waveforms

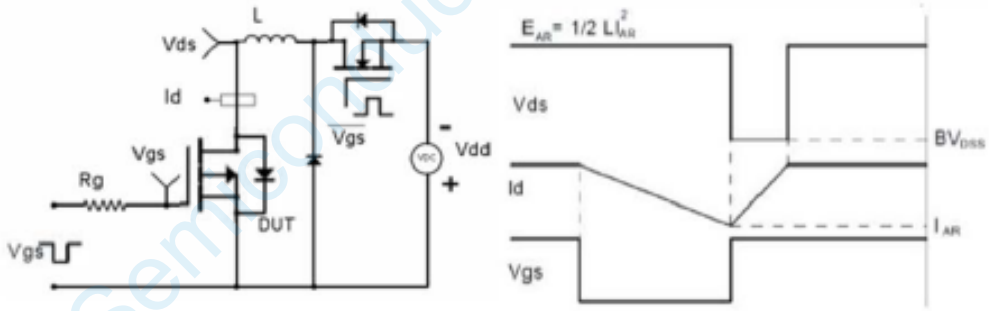


Diode Recovery Test Circuit & Waveforms

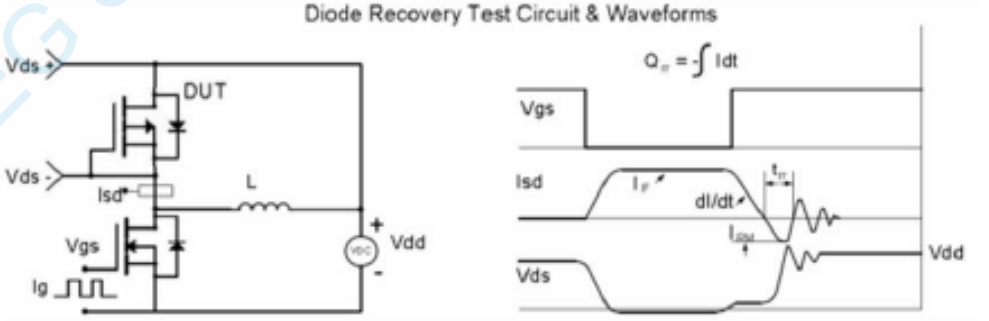


OVREG Semiconductor (xi'an) Co.,Ltd.

# Package Information

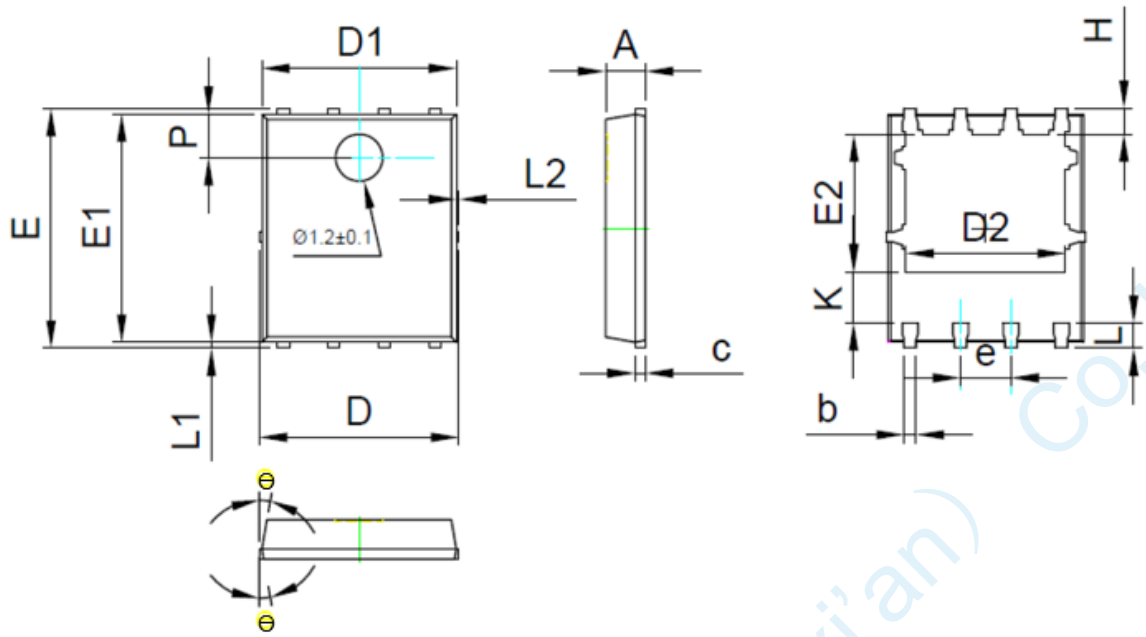


| SYMBOL | MIN | NOM | MAX |
|---|---|---|---|
| A | 0.90 | 1.00 | 1.10 |
| b | 0.35 | 0.40 | 0.45 |
| c | 0.21 | 0.25 | 0.34 |
| D | - | - | 5.1 |
| D1 | 4.85 | 4.90 | 4.95 |
| D2 | 3.96 | 4.01 | 4.06 |
| e | 1.27 BSC | | |
| E | 5.95 | 6.00 | 6.05 |
| E1 | 5.70 | 5.75 | 5.80 |
| E2 | 3.425 | 3.475 | 3.525 |
| H | 0.60 | 0.65 | 0.70 |
| K | 1.29 | - | - |
| L | 0.60 | 0.65 | 0.70 |
| L1 | 0.05 | 0.15 | 0.25 |
| L2 | - | - | 0.12 |
| θ | 8° | 10° | 12° |
| P | 1.05 | 1.10 | 1.15 |

# Ordering Information

| Part number | Material | Type | Reel size | MOQ |
|---|---|---|---|---|
| OVM30P09D5 | GREEN | T/R | 13 inch | 5k/reel |

OVREG Semiconductor (xi'an) Co.,Ltd.