Single N-Channel, 30V, 80A, Power MOSFET

Features

- ✧ High density cell design for Low $R_{DS(on)}$
- ✧ Green device available
- ✧ Small package : PDFN3.3x3.3
- ✧ Low gate charge

V_{DS} (V)	Typical $R_{DS(on)}$ (mΩ)
30	4.2 @ V_{GS}=4.5V
	2.5 @ V_{GS}=10V

Applications

- ✧ High current load applications
- ✧ Load switch for portable devices
- ✧ Battery Switch

Mechanical Data

- ✧ UL Flame Rating : UL94V-0
- ✧ RoHS/WEEE Compliant

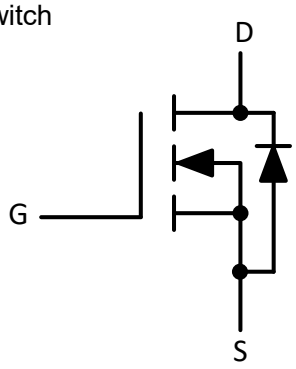

Circuit Diagram

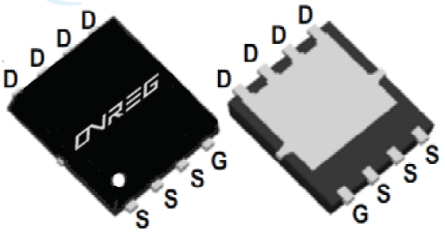

PDFN3.3x3.3

Absolute Maximum Rating at T_A = 25 °C, unless otherwise specified

Parameter		Symbol	Value	Units
Drain-Source Voltage		V_{DS}	30	V
Gate-Source Voltage		V_{GS}	±20	V
Continuous Drain Current	T_C=25 ℃	I_D	80	A
	T_C=100℃		52	
Power Dissipation	T_C=25 ℃	P_D	51.63	W
Thermal Resistance, Junction-to-Case		$R_{\theta JC}$	2.42	℃/W
Junction Temperature		T_J	150	℃
Storage Temperature		T_{STG}	-55~ +150	℃

OVREG Semiconductor (xi'an) Co.,Ltd.

Electrical Characteristics at T_A = 25 °C, unless otherwise specified

Symbol	Parameter	Test Conditions	Min	Typ	Max	Units
Off Characteristics						
BV_{DSS}	Drain-Source Breakdown Voltage	V_{GS} = 0 V, I_D = 250 μA	30			V
I_{DSS}	Zero Gate Voltage Drain Current	V_{DS} = 29.5 V, V_{GS} = 0 V			1	μA
I_{GSSF}	Gate Leakage Current, Forward	V_{GS} = 20 V, V_{DS} = 0 V			100	nA
I_{GSSR}	Gate Leakage Current, Reverse	V_{GS} = -20 V, V_{DS} = 0 V			-100	nA
On Characteristics						
$V_{GS(TH)}$	Gate Threshold voltage	V_{DS} = V_{GS}, I_D = 250 uA	1.1	1.6	2.1	V
$R_{DS(On)}$	Drain-Source on-state resistance	V_{GS} = 10 V, I_D = 30 A		2.5	3.5	mΩ
		V_{GS} = 4.5 V, I_D = 20 A		4.2	6.2	mΩ
Dynamic Characteristics						
C_{iss}	Input capacitance	VDS=15V, VGS=0V, F=1.0Mhz		3300		pF
C_{oss}	Output capacitance			480		pF
C_{rss}	Reverse transfer capacitance			433		pF
Switching Characteristics						
$t_{d(on)}$	Turn On Delay Time	VDD=15V, ID=30A, VGS=10V, RG=3Ohm (Note 3, 4)		4		ns
t_r	Rising Time			26		ns
$t_{d(off)}$	Turn Off Delay Time			58		ns
t_f	Fall Time			29		ns
Q_g	Total Gate Charge	VDD=15V, ID=30A, VGS=10V (Note 3, 4)		68.5		nC
Q_{gs}	Gate-Source Charge			9.6		nC
Q_{gd}	Gate-Drain Charge			12.4		nC
Drain-Source Diode Characteristics and Maximum Ratings						
I_S	Maximum Continuous Drain-Source Diode Forward Current				80	A
I_{SM}	Maximum Pulsed Drain-Source Diode Forward Current				320	A
V_{SD}	Diode Forward Voltage	V_{GS}= 0 V, I_S = 30 A			1.2	V
T_{rr}	Reverse recovery time	IF=20A, di/dt=100A/μS		20		ns
Q_{rr}	Reverse recovery charge			12		nC

Notes:
1. Repetitive Rating : Pulse width limited by maximum junction temperature
2. L = 0.5 mH, V_{DD} = 10V, V_{GS} = 10 V, R_G = 25 Ω, Starting T_j = 25°C
3. I_{SD} ≤ 30A, di/dt = 100A/us, V_{DD} ≤ BV_{DSS}, Staring T_j =25°C
4. Pulse Test : Pulse width ≤ 300us, Duty cycle ≤ 2%
5. Essentially independent of operating temperature

Typical Characteristics at T_A = 25 °C, unless otherwise specified

Fig.1 Power Dissipation Derating Curve

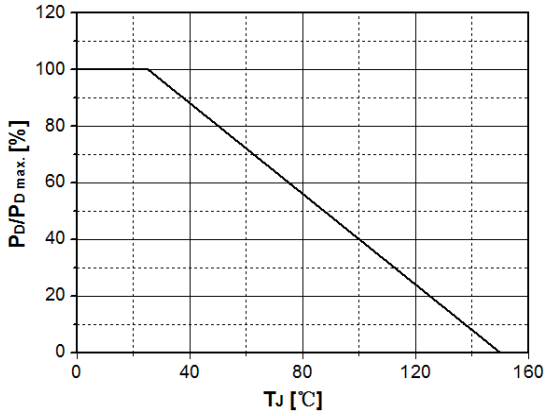

Fig.2 Avalanche Energy Derating Curve vs. Junction Temperature

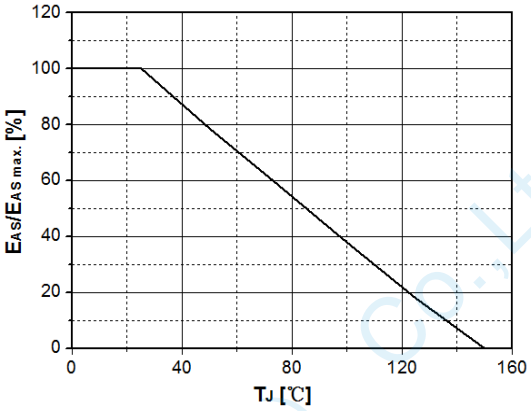

Fig.3 Typical Output Characteristics

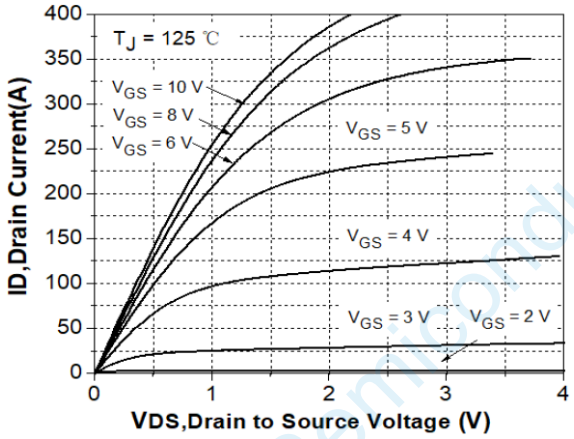

Fig. 4 Transconductance vs. Drain Current

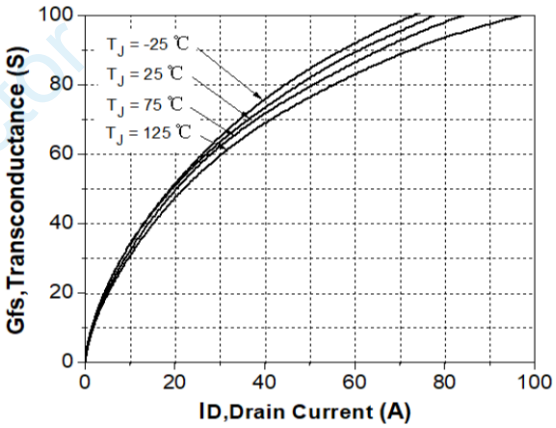

Fig.5 Typical Transfer Characteristics

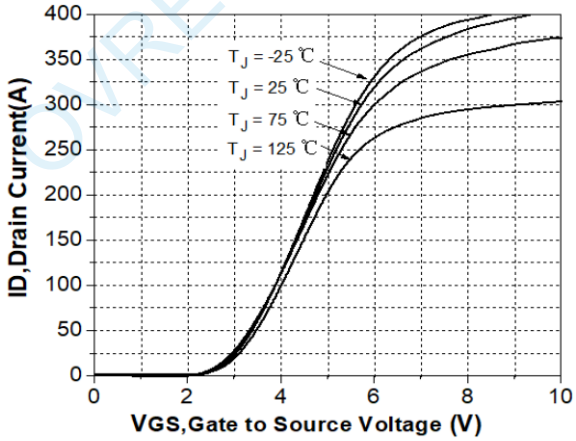

Fig. 6 State Resistance vs. Drain Current @-25℃

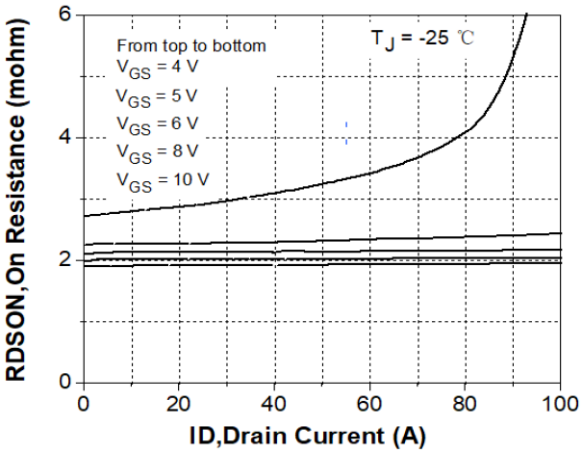

OVREG Semiconductor (xi'an) Co.,Ltd.

Typical Characteristics at T_A = 25 °C, unless otherwise specified

Fig.7 State Resistance vs. Drain Current @25℃

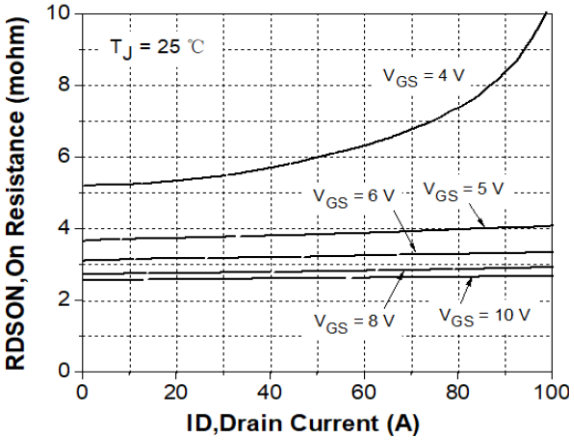

Fig. 8 State Resistance vs. Drain Current @125℃

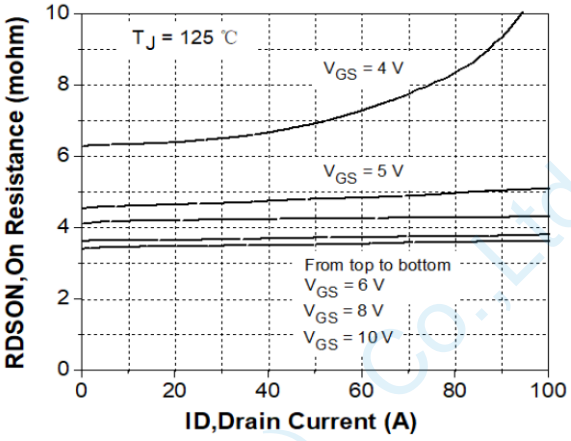

Fig.9 Typical Capacitance vs. Drain Source Voltage

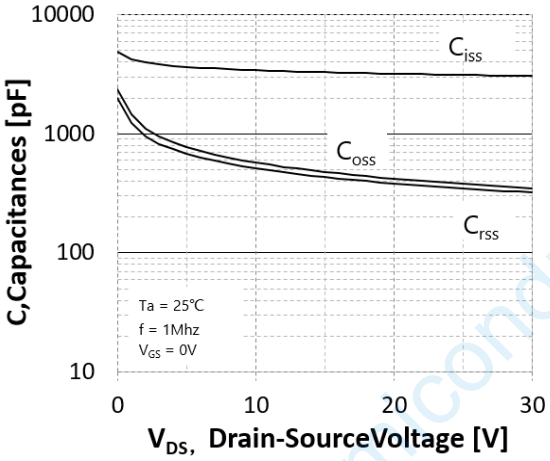

Fig.10 Dynamic Input Characteristics

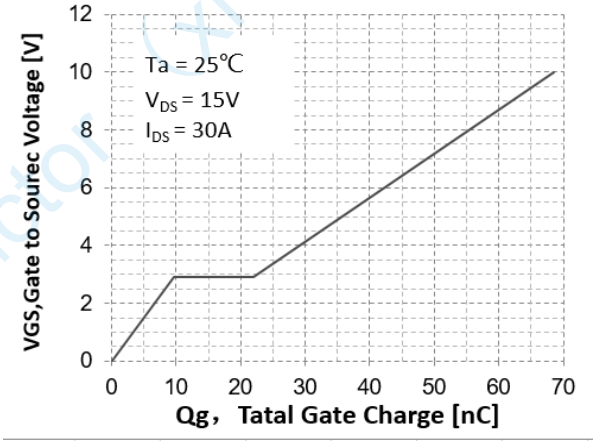

Fig.11 Breakdown Voltage
vs. Junction Temperature

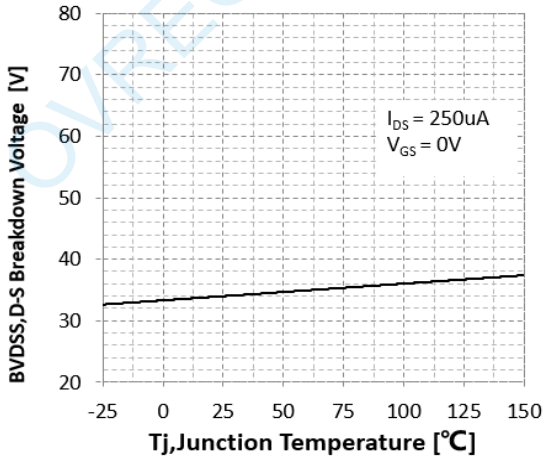

Fig. 12 Gate Threshold Voltage
vs. Junction Temperature

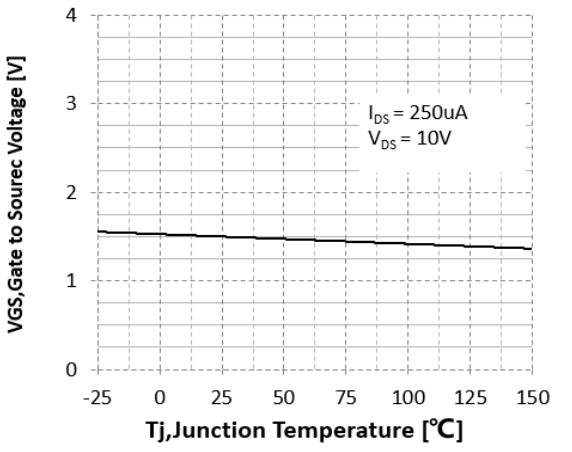

OVREG Semiconductor (Xi'an) Co.,Ltd.

Typical Characteristics at T_A = 25 °C, unless otherwise specified

Fig.13 On-Resistance Variation vs. Junction Temperature

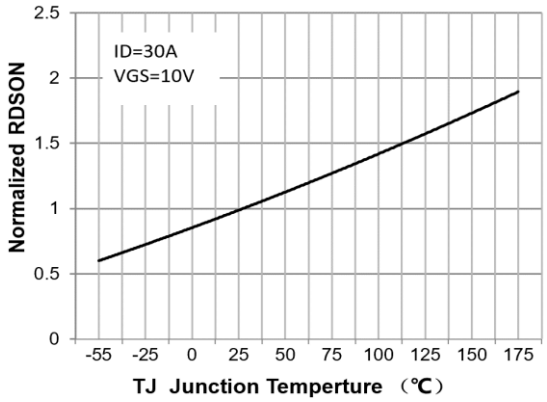

Fig.14 Maximum Drain Current vs. Case Temperature

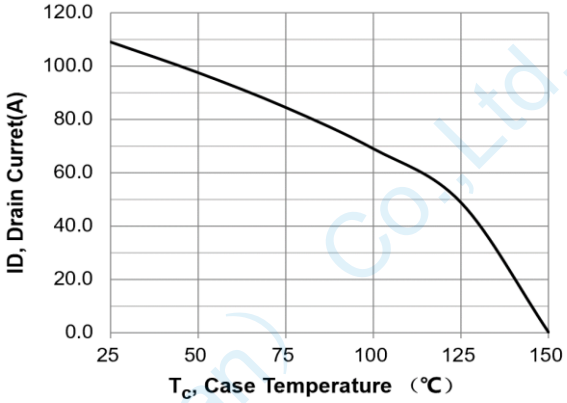

Fig.15 Body Diode Forward Voltage Vs Reverse Drain Current

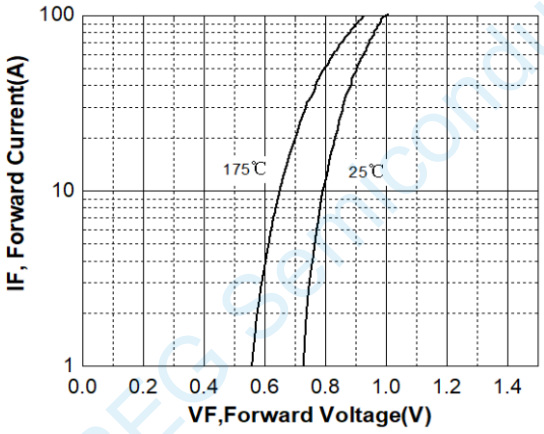

OVREG Semiconductor （xi'an） Co.,Ltd.

Typical Characteristics at TA = 25 °C, unless otherwise specified

Fig.16 Safe Operating Area

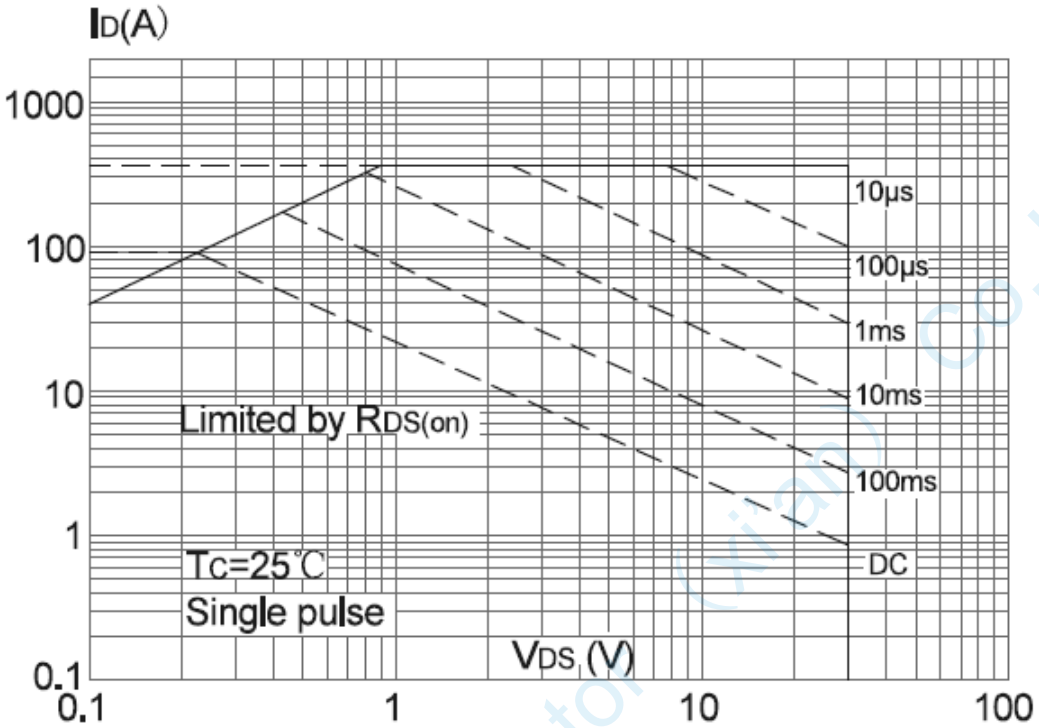

Fig. 17 Transient Thermal Response Curve

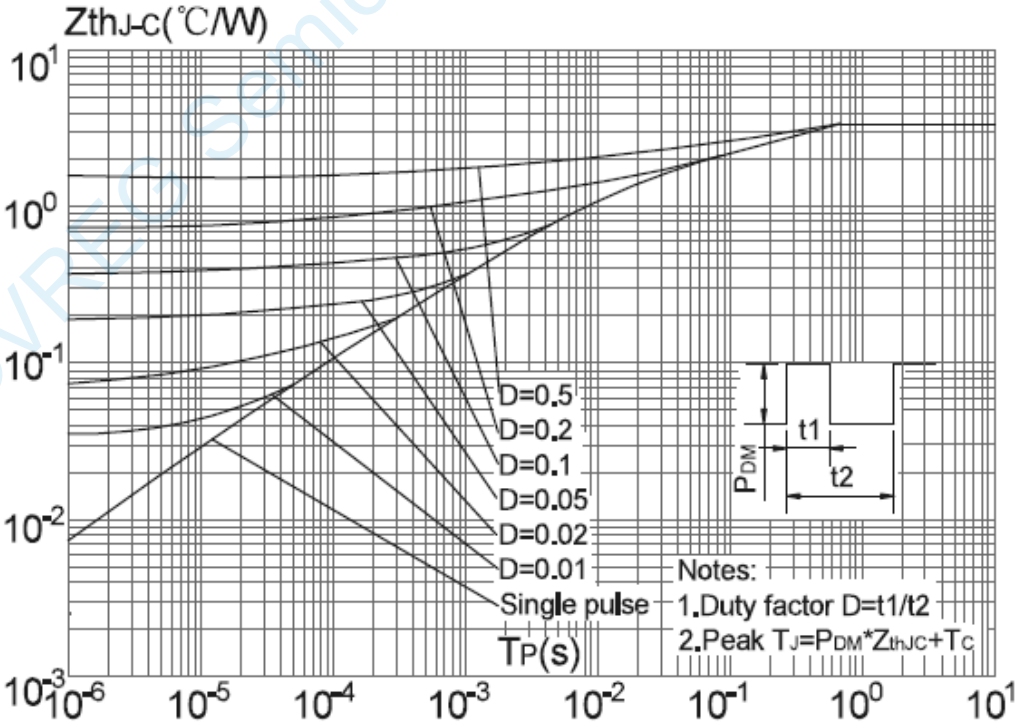

OVREG Semiconductor (xi'an) Co.,Ltd.

TEST CIRCUIT

Gate Charge Test Circuit & Waveform

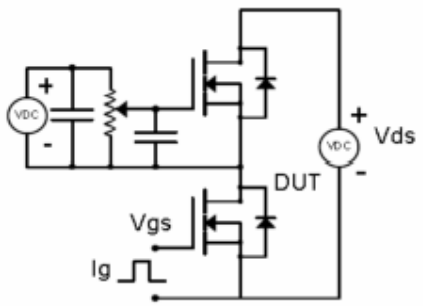

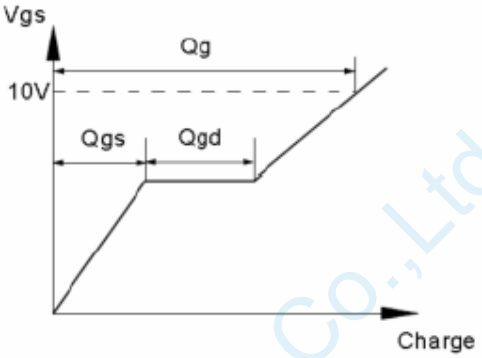

Resistive Switching Test Circuit & Waveforms

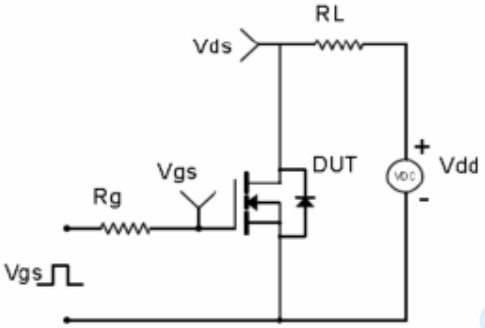

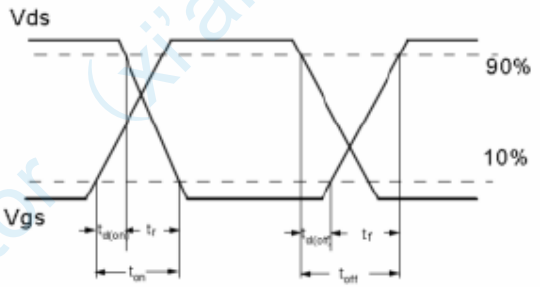

Unclamped Inductive Switching (UIS) Test Circuit & Waveforms

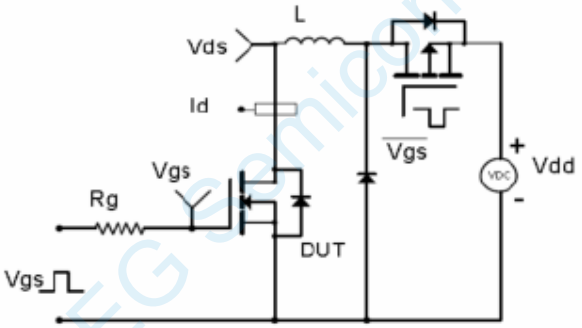

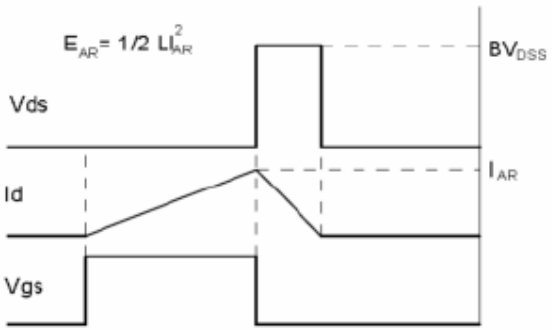

Diode Recovery Test Circuit & Waveforms

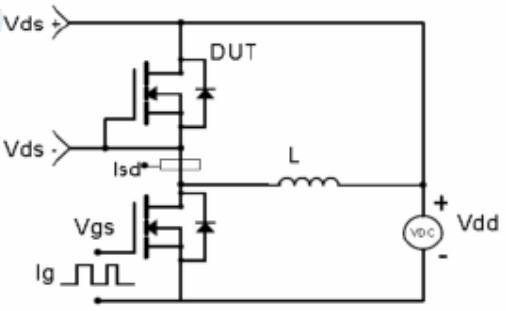

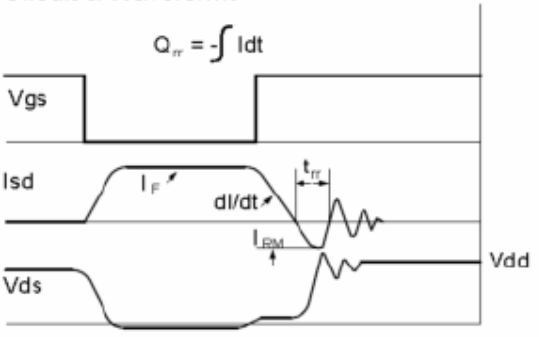

OVREG Semiconductor (xi'an) Co.,Ltd.

Package Information

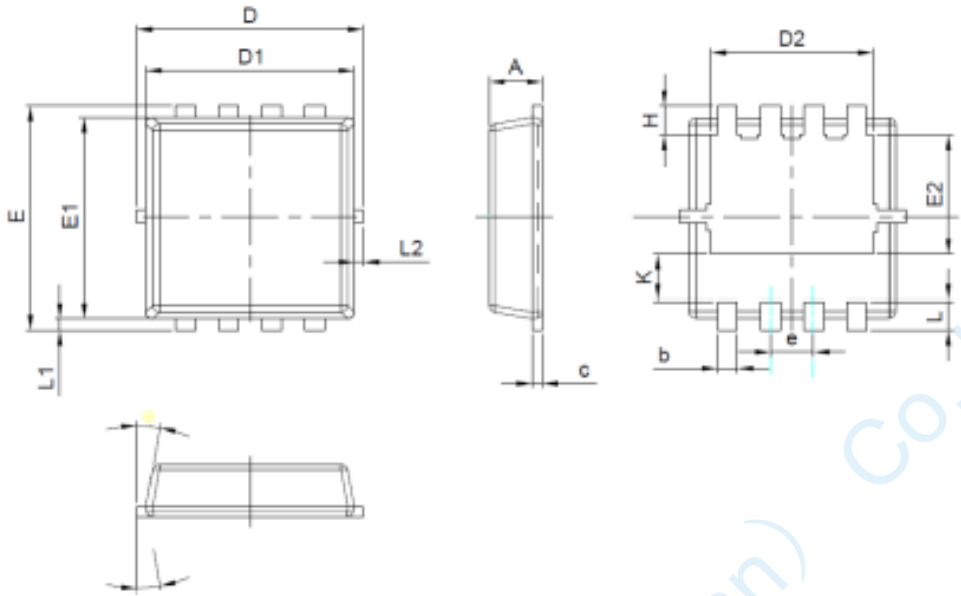

COMMON DIMENSIONS

(UNITS OF MEASURE = MILLIMETER)

SYMBOL	MIN	NOM	MAX
A	0.70	0.80	0.90
b	0.25	0.30	0.39
c	0.14	0.15	0.25
D	3.20	3.30	3.40
D1	3.00	3.15	3.30
D2	2.35	2.45	2.55
e	0.65 BSC		
E	3.25	3.35	3.45
E1	2.85	3.00	3.15
E2	1.635	1.735	1.835
H	0.33	0.48	0.63
K	0.585	0.685	0.785
L	0.30	0.40	0.50
L1	0.05	0.15	0.25
L2	-	-	0.15
θ	8°	10°	12°

Marking



X: DATE CODE

Ordering Information

Part number	Material	Type	Reel size	MOQ
OVM30N03D3	GREEN	T/R	13 inch	5k/reel

OVREG Semiconductor (xi'an) Co.,Ltd.