N-Channel, 250V, 15A, POWER MOSFET

Features

- ✧ New technology for high voltage device
- ✧ Low on-resistance and low conduction losses
- ✧ Small package : TO-252
- ✧ Ultra Low Gate Charge cause lower driving requirements

V_{DS} (V)	Typical $R_{DS(on)}$ (Ω)
250	0.2 @ V_{GS}=10V

Applications

- ✧ LED power supplies
- ✧ Cell Phone Charger
- ✧ Standby Power

Mechanical Data

- ✧ Case : Molded plastic body
- ✧ Terminals : Solder plated, solderable per MIL-STD-750,Method 2026
- ✧ Polarity : As marked
- ✧ RoHS/WEEE Compliant

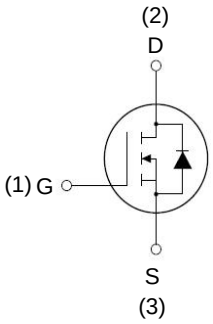

Circuit Diagram

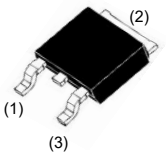

TO-252

Absolute Maximum Rating at T_A = 25 °C, unless otherwise specified

Parameter	Symbol	Limit	Unit
Drain-Source Voltage	V_{DS}	250	V
Gate-Source Voltage	V_{GS}	±20	V
Drain Current-Continuous	I_D	15	A
Drain Current-Continuous(T_C=100℃)	I_D (100℃)	10.6	A
Pulsed Drain Current	I_{DM}	60	A
Maximum Power Dissipation	P_D	140	W
Derating factor		0.93	W/℃
Single pulse avalanche energy (Note 1)	E_{AS}	80	mJ
Operating Junction and Storage Temperature Range	T_J,T_{STG}	-55 To 175	℃

Thermal Characteristic

Thermal Résistance, Junction-to-Case	$R_{\theta JC}$	1.1	℃/W

OVREG Semiconductor (xi'an) Co.,Ltd.

Electrical Characteristics at T_A = 25 °C, unless otherwise specified

Parameter	Symbol	Condition	Min	Typ	Max	Unit
Off Characteristics						
Drain-Source Breakdown Voltage	BV_{DSS}	V_{GS}=0V I_D=250μA	250	-	-	V
Zero Gate Voltage Drain Current	I_{DSS}	V_{DS}=250V,V_{GS}=0V	-	-	1	μA
Gate-Body Leakage Current	I_{GSS}	V_{GS}=±20V,V_{DS}=0V	-	-	±100	nA
On Characteristics						
Gate Threshold Voltage	$V_{GS(th)}$	V_{DS}=V_{GS},I_D=250μA	2.5	3.5	4.5	V
Drain-Source On-State Resistance	$R_{DS(ON)}$	V_{GS}=10V, I_D=7.5A	-	200	250	mΩ
Gate resistance	R_G		-	4.5	-	Ω
Forward Transconductance	g_{FS}	V_{DS}=5V,I_D=15A	15	-	-	S
Dynamic Characteristics						
Input Capacitance	C_{lss}	V_{DS}=125V,V_{GS}=0V, F=1.0MHz	-	475	-	PF
Output Capacitance	C_{oss}		-	34	-	PF
Reverse Transfer Capacitance	C_{rss}		-	1.2	-	PF
Switching Characteristics (Note 2)						
Turn-on Delay Time	$t_{d(on)}$	V_{DD}=125V, R_L=8Ω V_{GS}=10V,R_G=3Ω	-	4	-	nS
Turn-on Rise Time	t_r		-	5	-	nS
Turn-Off Delay Time	$t_{d(off)}$		-	10	-	nS
Turn-Off Fall Time	t_f		-	2	-	nS
Total Gate Charge	Q_g	V_{DS}=125V,I_D=15A, V_{GS}=10V	-	8.9	-	nC
Gate-Source Charge	Q_{gs}		-	3.3	-	nC
Gate-Drain Charge	Q_{gd}		-	2.5	-	nC
Drain-Source Diode Characteristics						
Diode Forward Voltage	V_{SD}	V_{GS}=0V,I_S=15A	-	-	1.2	V
Diode Forward Current	I_S		-	-	15	A
Reverse Recovery Time	t_{rr}	T_J = 25°C, I_F = I_S di/dt = 100A/μs	-	25	-	nS
Reverse Recovery Charge	Qrr		-	110	-	nC

Notes:

1. EAS condition : Tj=25℃,V_{DD}=50V,V_G=10V,L=0.5mH,Rg=25Ω
2. Guaranteed by design, not subject to production
3. These curves are based on the junction-to-case thermal impedance which is measured with the device mounted to a large heatsin k, assuming a maximum junction temperature of TJ(MAX)=175° C. The SOA curve provides a single pulse rating.

OVREG Semiconductor (xi'an) Co.,Ltd.

Typical Characteristics at T_A = 25 °C, unless otherwise specified

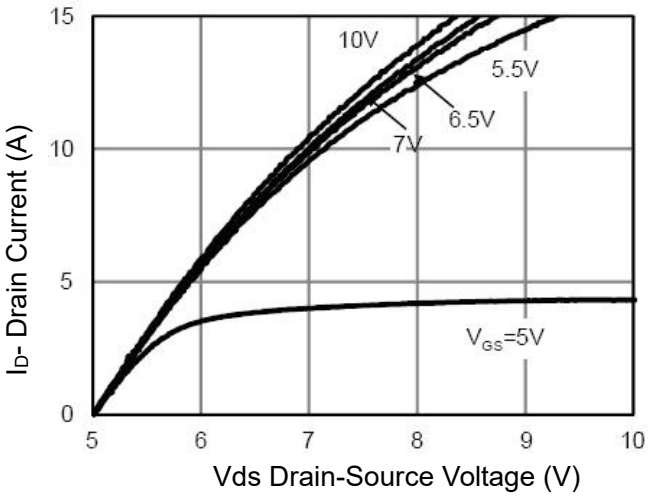

Figure 1 Output Characteristics

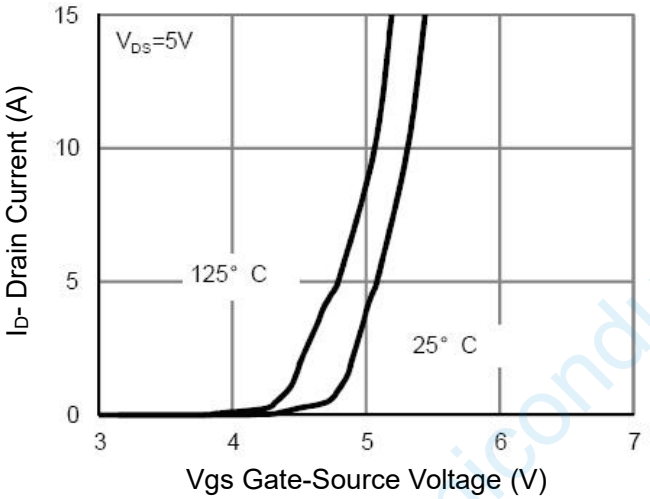

Figure 2 Transfer Characteristics

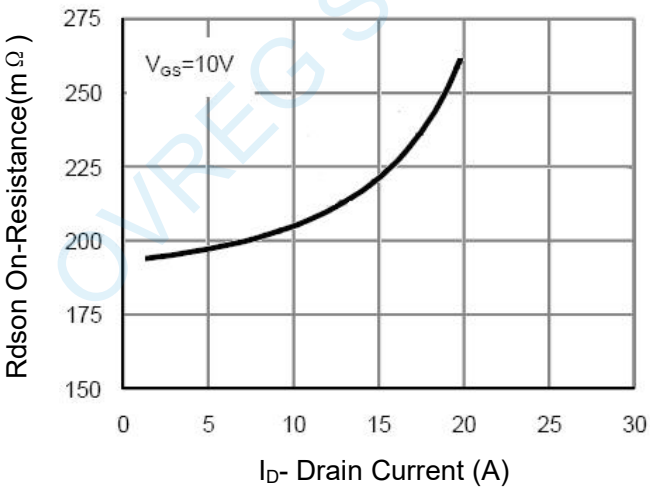

Figure 3 Rdson- Drain Current

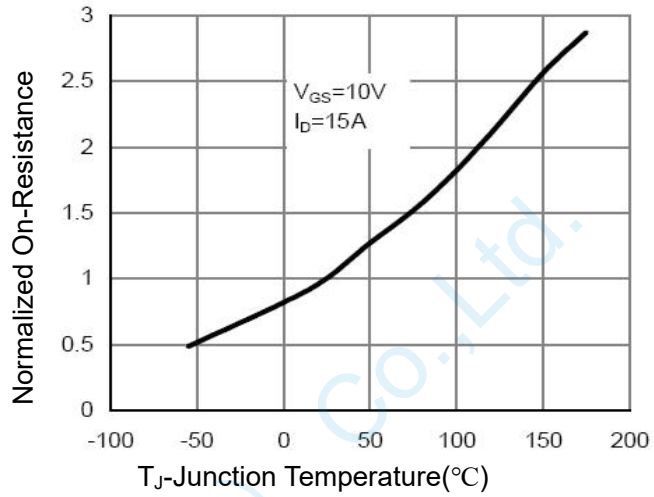

Figure 4 Rdson-Junction Temperature

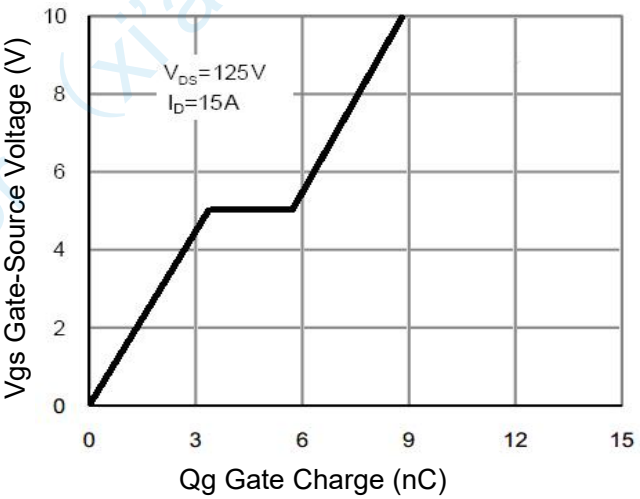

Figure 5 Gate Charge

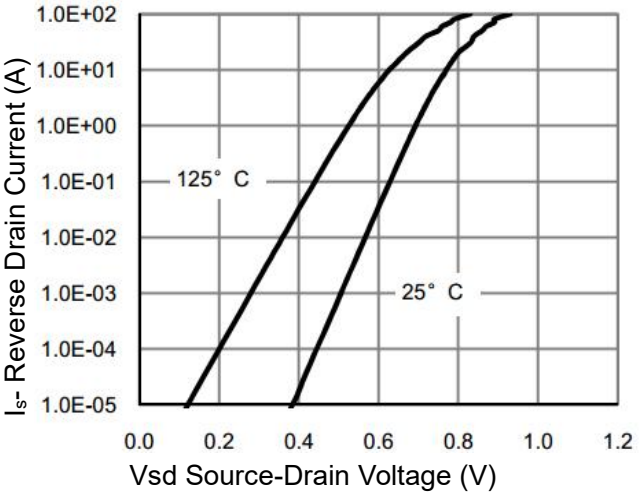

Figure 6 Source- Drain Diode Forward

OVREG Semiconductor (Xi'an) Co.,Ltd.

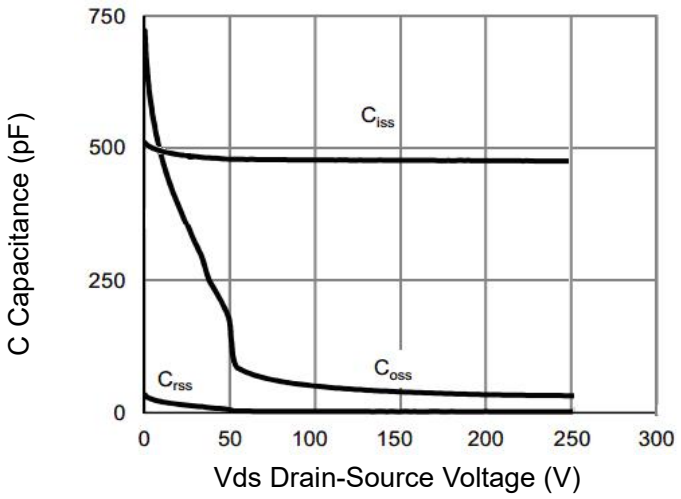

Figure 7 Capacitance vs Vds

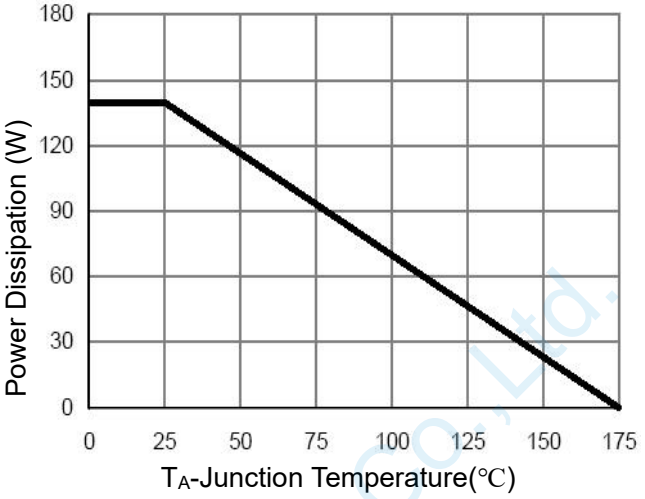

Figure 9 Power De-rating

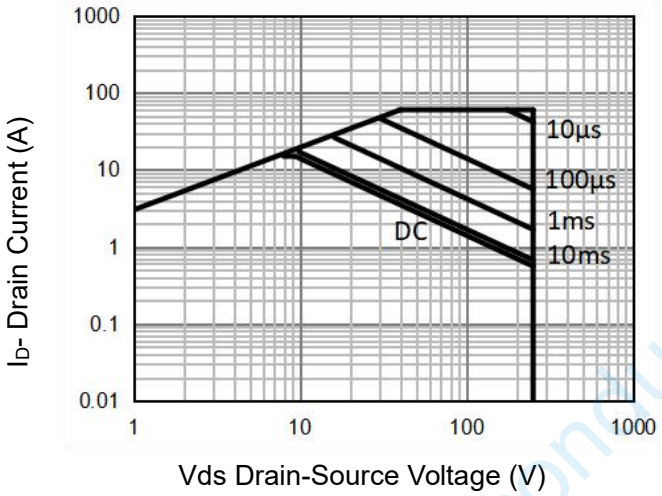

Figure 8 Safe Operation Area (Note 3)

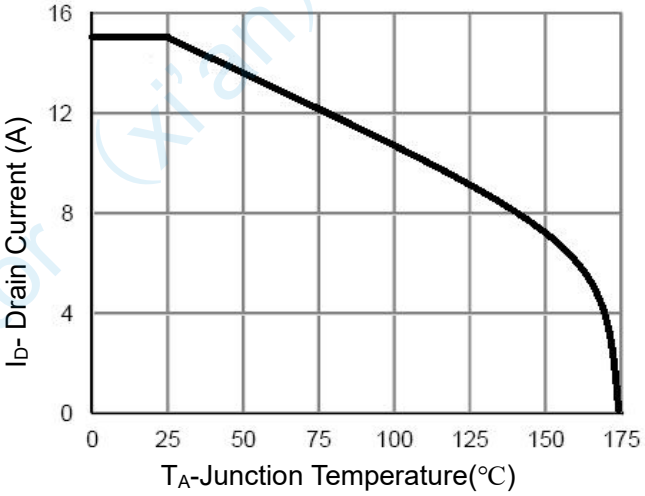

Figure 10 Current De-rating

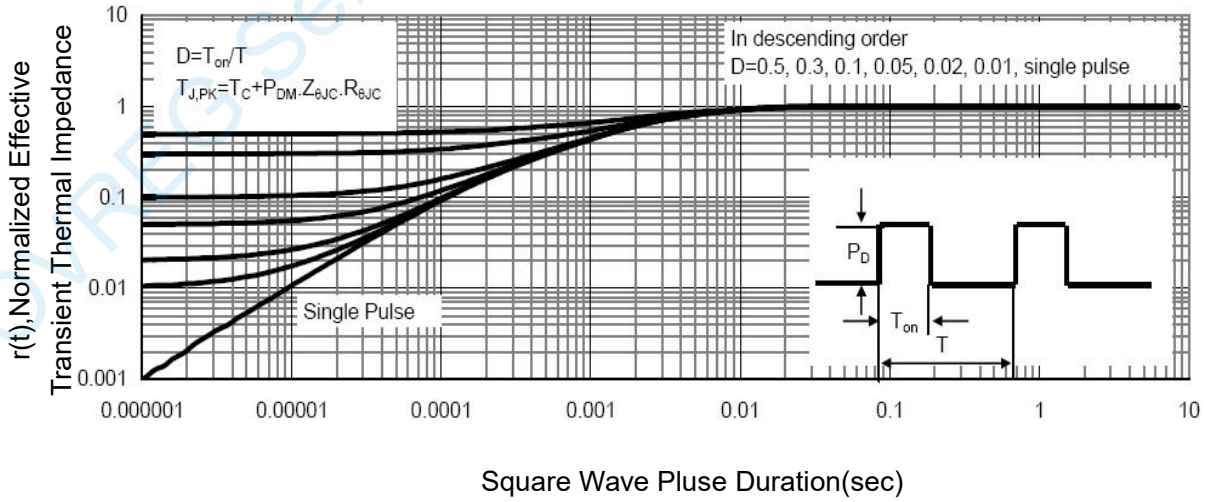

Figure 11 Normalized Maximum Transient Thermal Impedance

Test Circuit

1) E_{AS} test Circuit

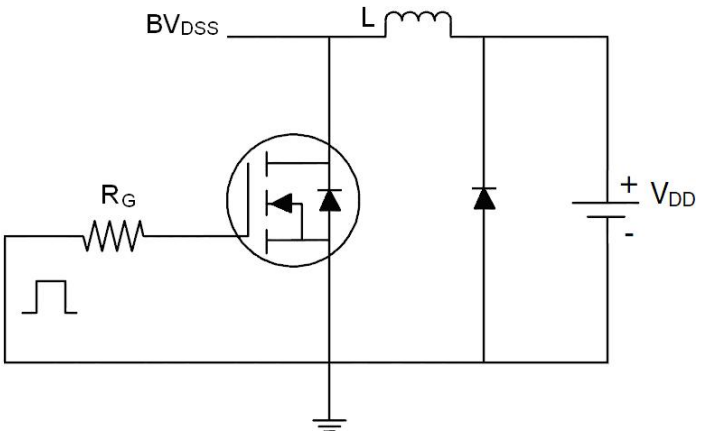

2) Gate charge test Circuit

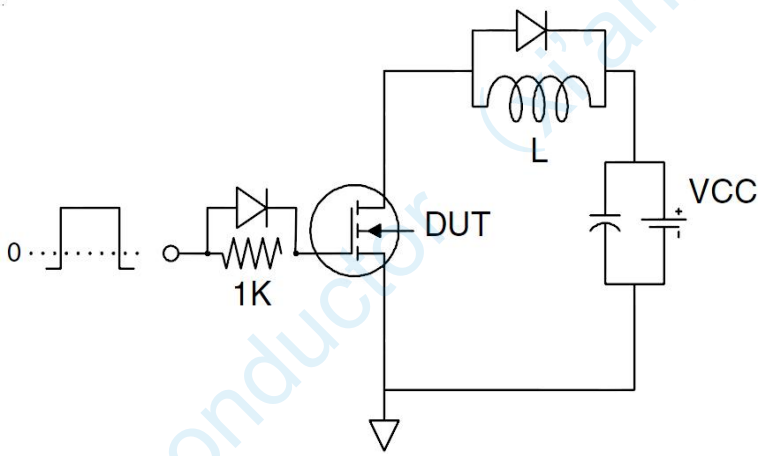

3) Switch Time Test Circuit

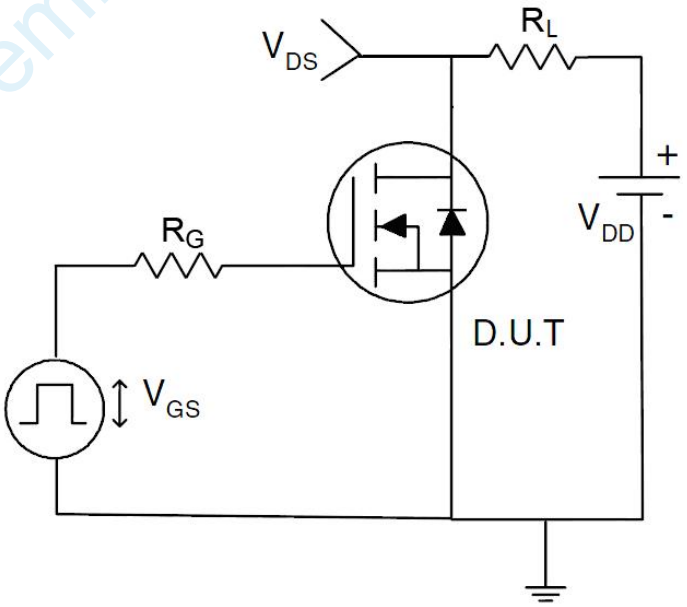

OVREG Semiconductor (xi'an) Co.,Ltd.

Package Information

TO-252

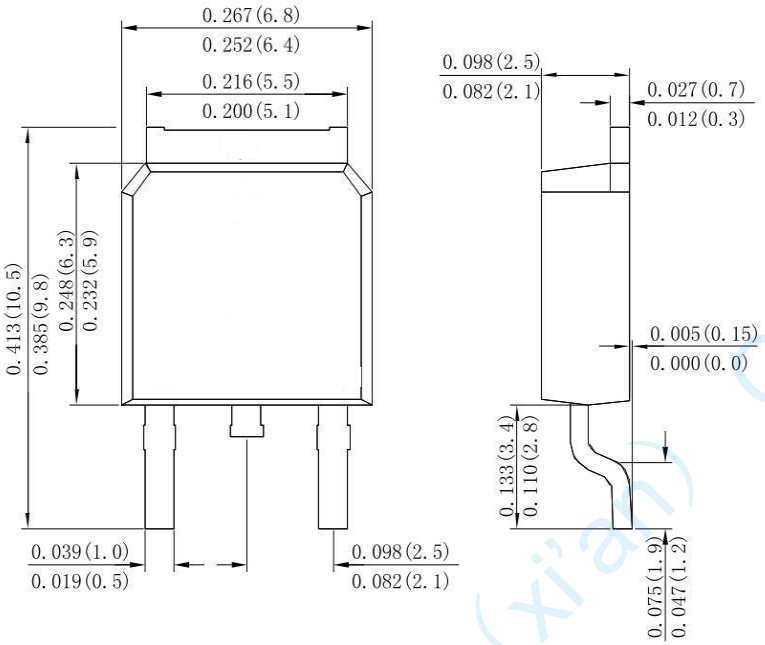

Suggested Soldering Temperature Profile

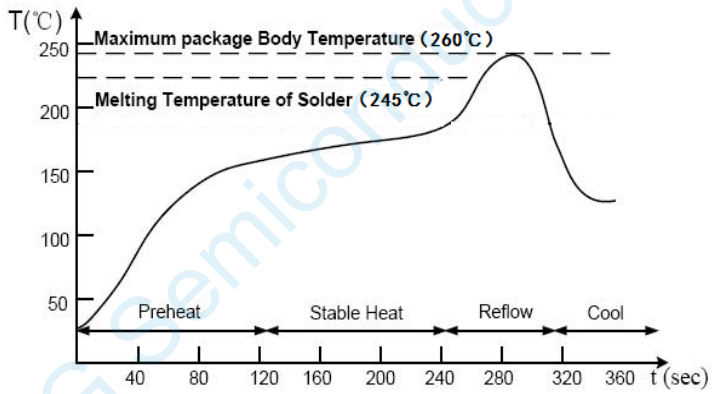

Note

- Recommended reflow methods: IR, vapor phase oven, hot air oven, wave solder.
- The device can be exposed to a maximum temperature of 260°C for 10 seconds.
- Devices can be cleaned using standard industry methods and solvents.
- If reflow temperatures exceed the recommended profile, devices may not meet the performance requirements.

Ordering Information

Package	Reel Size	Reel DIA. (mm)	Q'TY/Reel (Kpcs)	Box Size (mm)	QTY/Box (Kpcs)	Carton Size (mm)	Q'TY/Carton (Kpcs)
TO-252	13'	330	2.5	340	5.0	360*360*360	40

OVREG Semiconductor (xi'an) Co.,Ltd.