Single P-Channel, -20V, -10A, Power MOSFET

Features

- ✧ High density cell design for Low $R_{DS(on)}$
- ✧ Green device available
- ✧ Small package : DFN2x2-6L
- ✧ Low gate charge

V_{DS} (V)	Typical $R_{DS(on)}$ (mΩ)
-20	17 @ V_{GS}=-4.5V
	21 @ V_{GS}=-2.5V

Applications

- ✧ High current load applications
- ✧ Load switch for portable devices
- ✧ Battery Switch

Mechanical Data

- ✧ UL Flame Rating : UL94V-0
- ✧ RoHS/WEEE Compliant

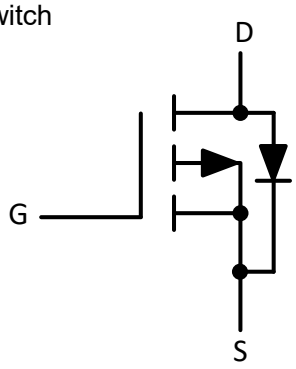

Circuit Diagram

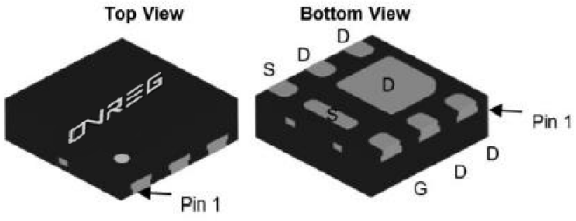

DFN2x2-6L

Absolute Maximum Rating at T_A = 25 °C, unless otherwise specified

Parameter		Symbol	Value	Units
Drain-Source Voltage		V_{DS}	-20	V
Gate-Source Voltage		V_{GS}	±12	V
Continuous Drain Current	T_C=25 ℃	I_D	-10	A
	T_C=100℃		-7	
Power Dissipation	T_C=25 ℃	P_D	4.5	W
Thermal Resistance from Junction to Ambient		$R_{\theta JA}$	27.8	℃/W
Junction Temperature		T_J	150	℃
Storage Temperature		T_{STG}	-55~ +150	℃

OVREG Semiconductor (xi'an) Co.,Ltd.

Electrical Characteristics at T_A = 25 °C, unless otherwise specified

Symbol	Parameter	Test Conditions	Min	Typ	Max	Units
Static Characteristics						
BV_{DSS}	Drain-Source Breakdown Voltage	V_{GS} = 0 V, I_D = -250 μA	-20			V
I_{DSS}	Zero Gate Voltage Drain Current	V_{DS} = -20 V, V_{GS} = 0 V, T_J = 25℃			-1	μA
I_{GSS}	Gate Leakage Current	V_{GS} = ±12 V, V_{DS} = 0 V			±100	nA
$V_{GS(TH)}$	Gate Threshold voltage	V_{DS} = V_{GS}, I_D = -250 μA	-0.4	-0.7	-0.9	V
$R_{DS(On)}$	Drain-Source on-state resistance	V_{GS} = -4.5 V, I_D = -10A		17	21.5	mΩ
		V_{GS} = -2.5 V, I_D = -5A		21	29	
Dynamic Characteristics						
C_{ISS}	Input capacitance	V_{DS} = -10 V, V_{GS} = 0 V, f = 1.0 MHZ		1950		pF
C_{OSS}	Output capacitance			230		pF
C_{RSS}	Reverse transfer capacitance			220		pF
Switching Characteristics						
$T_{D(ON)}$	Turn On Delay Time	V_{DS} = -10 V, I_D = -10 A, V_{GS} = -4.5 V, R_{GEN} = 2.5 Ω		9		ns
T_R	Rising Time			30		ns
$T_{D(OFF)}$	Turn Off Delay Time			27		ns
T_F	Fall Time			7		ns
Q_G	Total Gate Charge	V_{DS} = -10 V, I_D = -6 A, V_{GS} = -4.5 V		14.8		nC
Q_{GS}	Gate-Source Charge			2.3		nC
Q_{GD}	Gate-Drain Charge			4.5		nC
Drain-Source Diode Characteristics and Maximum Ratings						
I_S	Maximum Continuous Body-Diode Forward Current				-10	A
I_{SM}	Maximum Pulsed Body-Diode Forward Current (NOTE 2)				-40	A
V_{SD}	Diode Forward Voltage	V_{GS} = 0 V, I_S = -10 A		-0.8		V

Notes:

1. The max drain current rating is package limited
2. Repetitive Rating: Pulse width limited by maximum junction temperature
3. Mount on minimum PCB layout

OVREG Semiconductor (xi'an) Co.,Ltd.

Typical Characteristics at T_A = 25 °C, unless otherwise specified

Fig.1 Output Characteristics

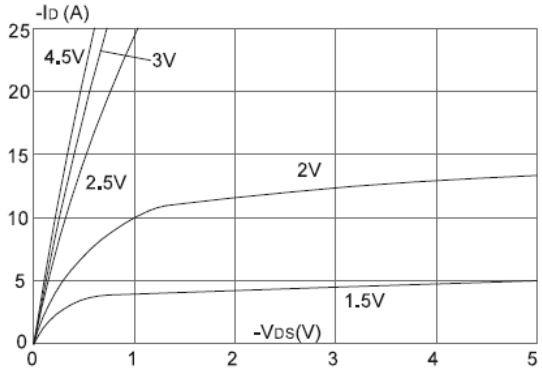

Fig.2 Typical Transfer Characteristics

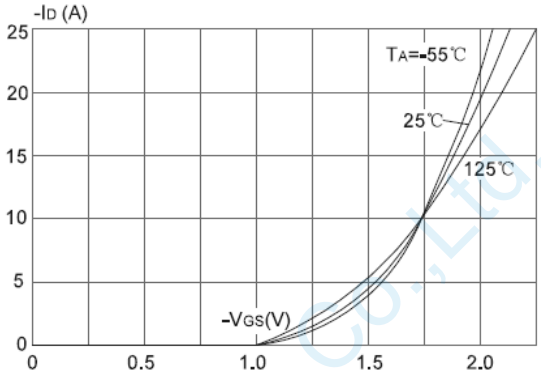

Fig.3 On-resistance VS Drain Current

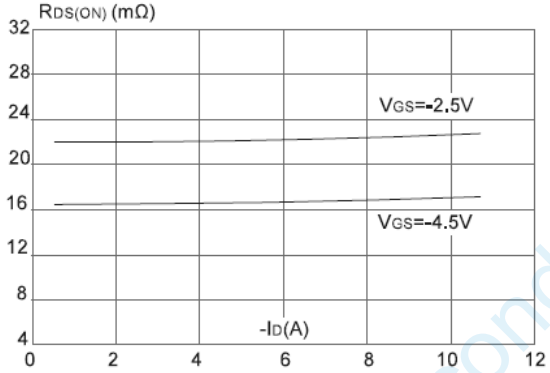

Fig. 4 Body Diode Characteristics

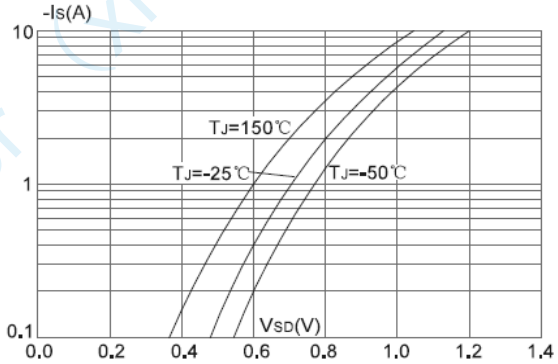

Fig.5 Gate Charge Characteristics

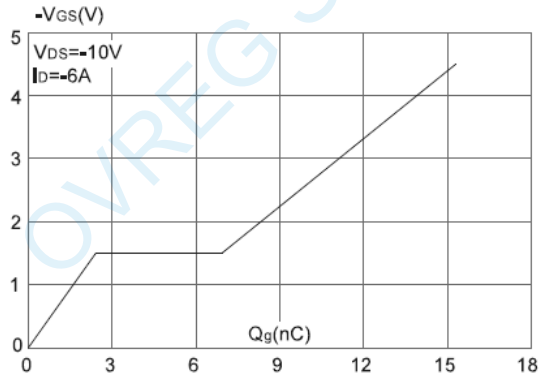

Fig. 6 Capacitance Characteristics

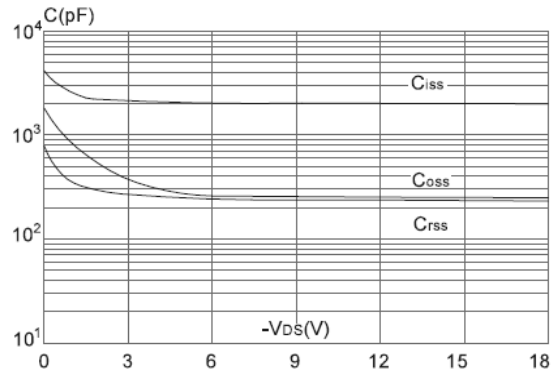

OVREG Semiconductor (xi'an) Co.,Ltd.

Typical Characteristics at T_A = 25 °C, unless otherwise specified

Fig.7 Normalized Breakdown Voltage VS Junction Temperature

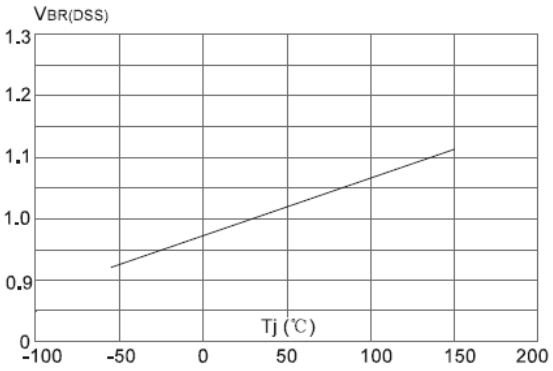

Fig. 8 Normalized On-Resistance Variation VS Junction Temperature

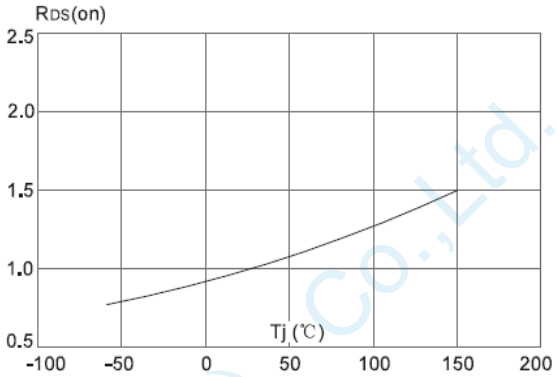

Fig.9 Maximum Continuous Drain Current VS.Case Temperature

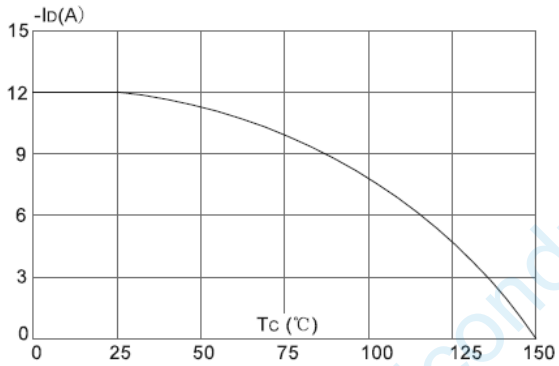

OVREG Semiconductor (xi'an) Co.,Ltd.

Typical Characteristics at T_A = 25 °C, unless otherwise specified

Fig.10 Maximum Safe Operating Area

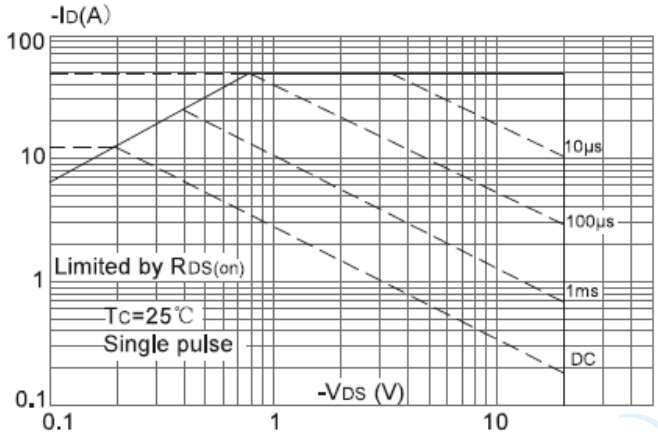

Fig. 11 Maximum Effective Transient Thermal Impedance，Junction-to-Ambient

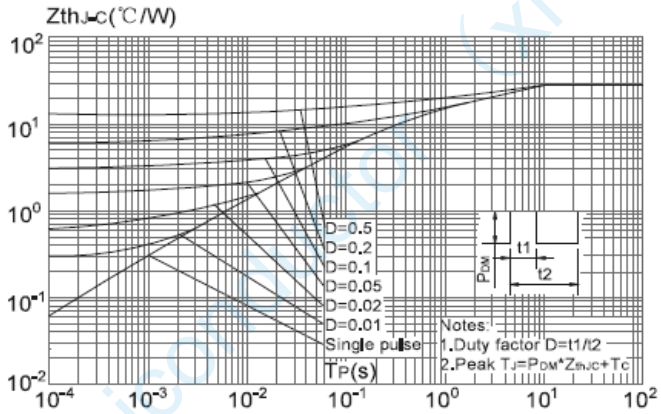

OVREG Semiconductor (xi'an) Co.,Ltd.

TEST CIRCUIT

Gate Charge Test Circuit & Waveform

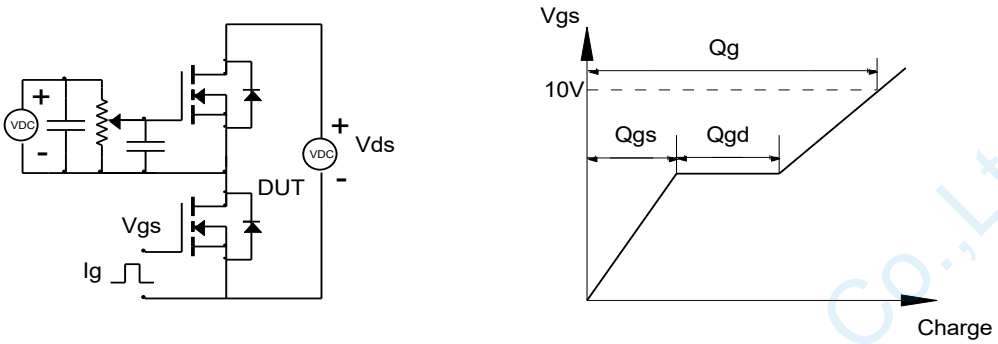

Resistive Switching Test Circuit & Waveforms

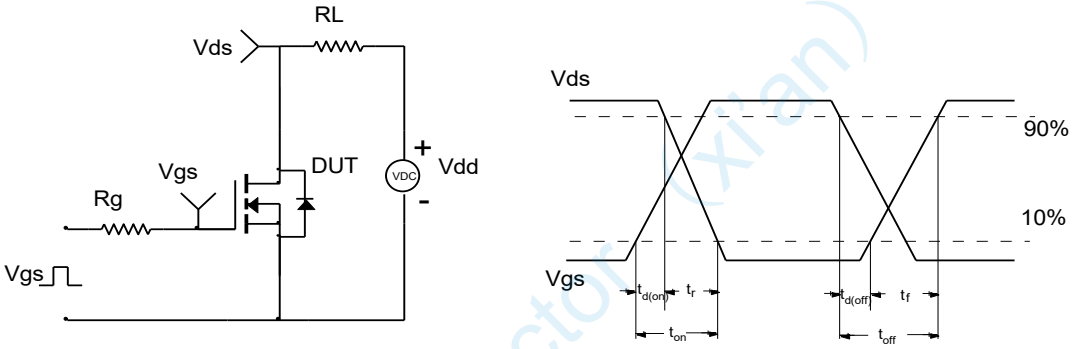

Unclamped Inductive Switching (UIS) Test Circuit & Waveforms

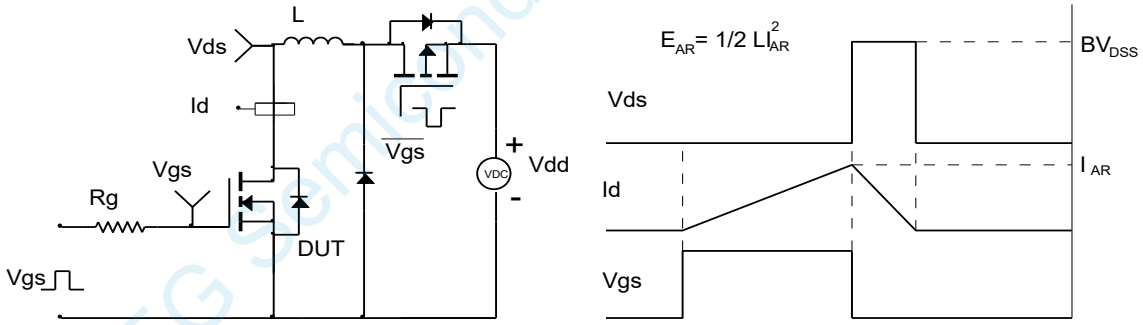

Diode Recovery Test Circuit & Waveforms

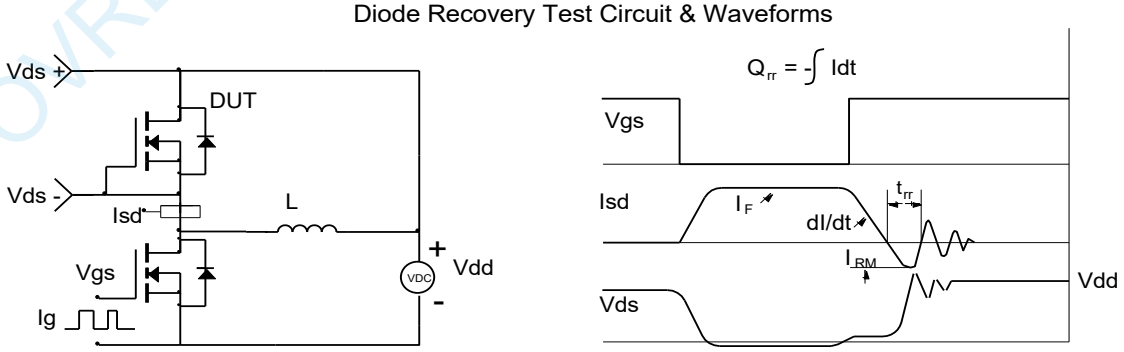

OVREG Semiconductor (xi'an) Co.,Ltd.

Package Information

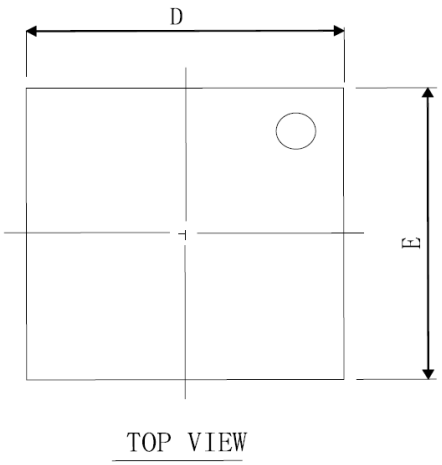

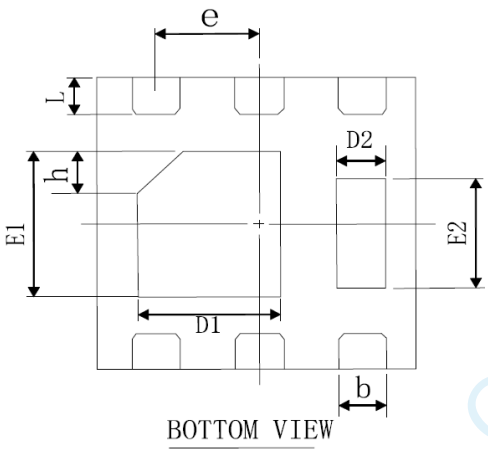

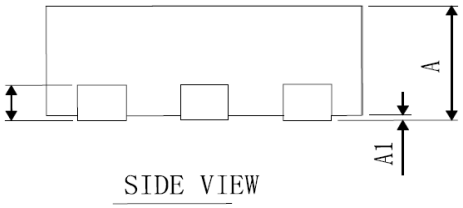

COMMON DIMENSIONS
(UNITS OF MEASURE=mm)

SYMBOL	MIN	NOM	MAX
A	0.70	0.75	0.80
A1	0.00	0.02	0.05
b	0.20	0.25	0.30
D	1.95	2.00	2.07
E	1.95	2.00	2.07
D1	0.80	0.90	1.00
E1	0.90	1.00	1.10
D2	0.20	0.30	0.40
E2	0.65	0.75	0.85
L	0.20	0.25	0.35
h	0.20	0.25	0.30
c	0.203 REF		
e	0.65 BSC		

A	0.55	0.60	0.65
A	0.50	0.55	0.60

Marking



Ordering Information

Part number	Material	Type	Reel size	MOQ
OVM20P21D2	GREEN	T/R	7 inch	3k/reel

OVREG Semiconductor (Xi'an) Co.,Ltd.