100V, 0.9mΩ, 380A N-Channel MOSFET

Features

- ✧ Extremely low on-resistance RDS(on)
- ✧ Excellent QgxRDS(on) product(FOM)
- ✧ Rugged and reliable
- ✧ 100% Avalanche Tested

V_{DS} (V)	Typical $R_{DS(on)}$ (mΩ)
100	0.9 @ V_{GS}=10V

Applications

- ✧ Motor control and drive
- ✧ UPS
- ✧ Battery management System

Mechanical Data

- ✧ Reel Size : 13 inch
- ✧ RoHS/WEEE Compliant

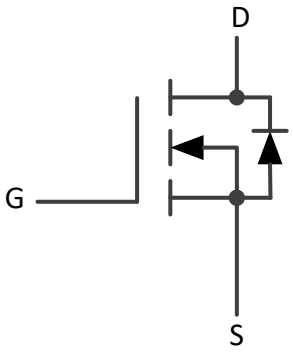

Circuit Diagram

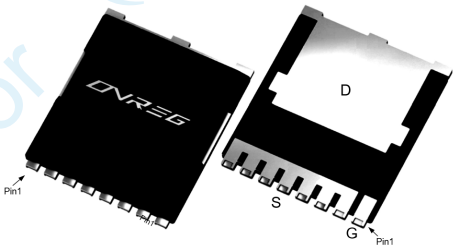

TOLL-8L

Absolute Maximum Rating at T_A = 25 °C, unless otherwise specified

Parameter		Symbol	Value	Units
Drain-Source Voltage		V_{DS}	100	V
Gate-Source Voltage		V_{GS}	±20	V
Continuous Drain Current	T_C=25℃	I_D	380	A
	T_C=100℃		240	
Pulsed drain current (T_C = 25°C, tp limited by Tj max)		I_{DM}	1200	A
Avalanche energy, single pulse(Note1)		E_{AS}	1901	mJ
Power dissipation (T_C = 25°C)		P_D	347	W
Junction Temperature and Storage Temperature		Tj，T_{STG}	-55~ +150	℃

OVREG Semiconductor (xi'an) Co.,Ltd.

Thermal Resistance

Parameter	Symbol	Min.	Typ.	Max.	Units
Thermal resistance, junction - case	$R_{\theta JC}$	-	-	0.36	℃/W
Thermal resistance, junction - ambient(Note2)	$R_{\theta JA}$	-	-	45	℃/W

Electrical Characteristics at T_A = 25 °C, unless otherwise specified

Parameter	Symbol	Conditions	Min.	Typ.	Max.	Units
Static Characteristics						
Drain-source breakdown voltage	BV_{DSS}	VGS = 0V, ID =250μA	100	-	-	V
Zero gate voltage drain current	I_{DSS}	VDS =100V,VGS =0V	-	-	1	uA
		T_j = 125°C	-	-	100	μA
Gate-source leakage current	I_{GSS}	VGS =±20V, VDS =0V	-	-	±100	nA
Gate threshold voltage	$V_{GS(th)}$	VDS =VGS, ID =250μA	2.0	3.0	4.0	V
Drain-source on-resistance	$R_{DS(on)}$	VGS =10V, ID =100A	-	0.9	1.1	mΩ
Gate resistance	R_G	F=1MHZ,Open Drain	-	4	-	Ω
Dynamic characteristics(Note3)						
Input Capacitance	C_{iss}	V_{DS}=25V,V_{GS}=0V,f=1MHz	-	12314	-	pF
Output Capacitance	C_{oss}		-	5238	-	
Reverse Transfer Capacitance	C_{rss}		-	265	-	
Turn-on delay time	$t_{d(on)}$	V_{GS}=10 V, V_{DD}=50V, R_G=4.0Ω	-	38	-	ns
Rise time	t_r		-	101	-	
Turn-off delay time	$t_{d(off)}$		-	110	-	
Fall time	t_f		-	137	-	
Gate Total Charge	Q_G	V_{GS} =10V, VDS=50V, ID=100A	-	200	-	nC
Gate-Source charge	Q_{GS}		-	62	-	
Gate-Drain charge	Q_{GD}		-	45	-	
Reverse Diode Characteristics						
Drain-Source Diode Forward Voltage	V_{SD}	VGS=0V,ISD=100A	-	0.83	1.2	V
Reverse Recovery Time	t_{rr}	IF=100A dI/dt=100A/μs	-	97	-	ns
Reverse Recovery Charge	Q_{rr}		-	185	-	nC

Notes:

1: limited by TJmax，starting TJ=25℃，L=0.1mH，RG=25Ω，VGS=10V.
2: Surface mounted on 1in2 FR-4 board.
3: Pulse test，pulse width≤300us，duty cycle≤2%.

OVREG Semiconductor (xi'an) Co.,Ltd.

Typical Characteristics at T_A = 25 °C, unless otherwise specified

Output Characteristic

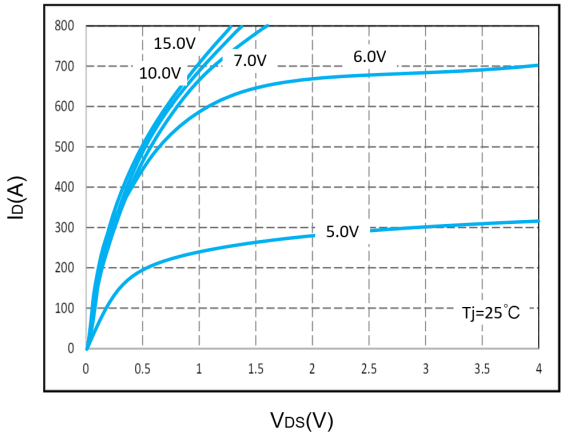

Transfer Characteristic

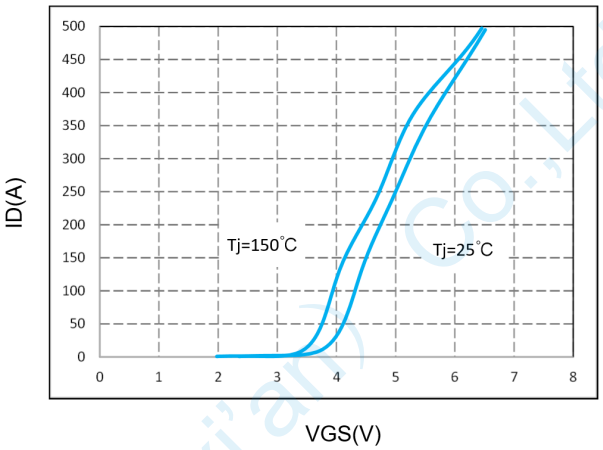

RDS(ON) VS. ID

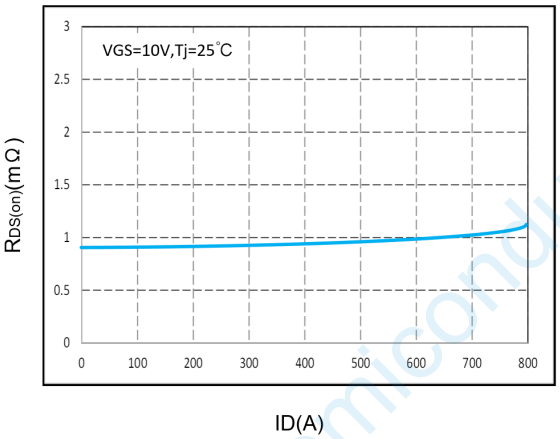

Gate Charge Characteristics

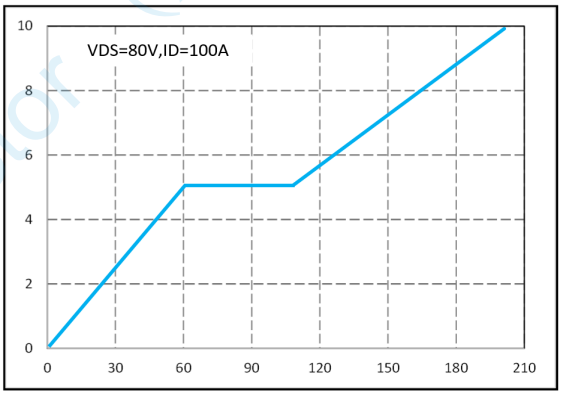

RDS(ON) VS. TJ

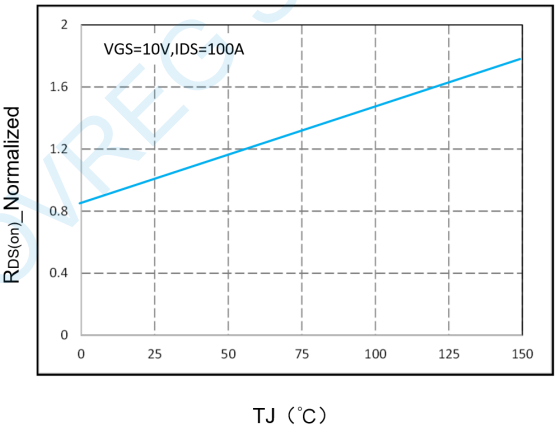

VGS(th) VS. TJ

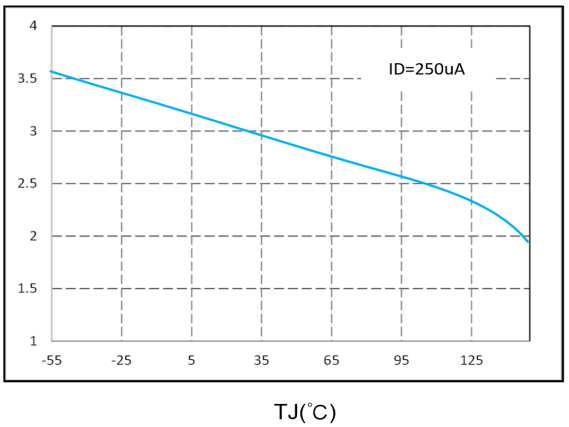

OVREG Semiconductor (xi'an) Co.,Ltd.

Safe Operation Area

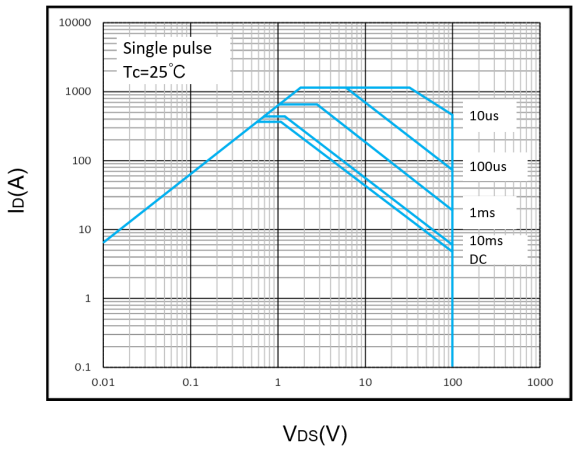

Thermal Transient Impedance

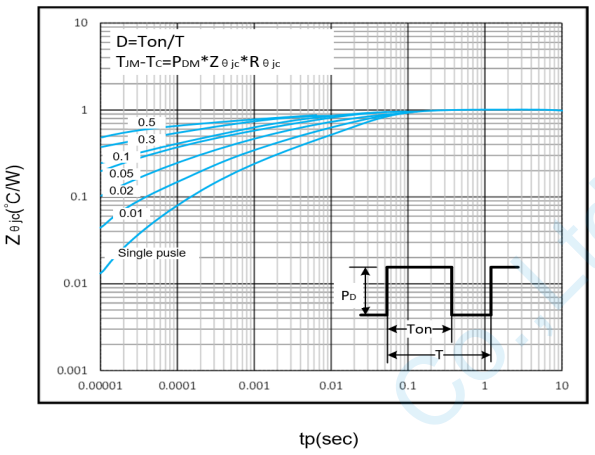

Drain Current

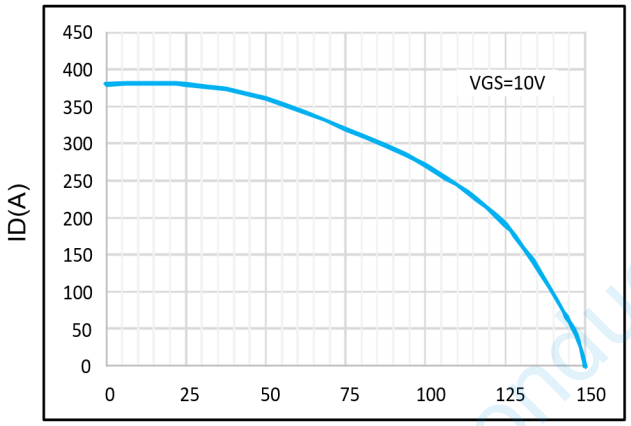

Power Dissipation

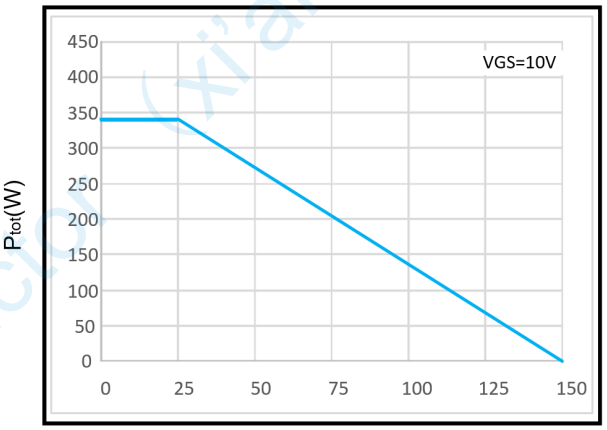

Source-Drain Diode Forward

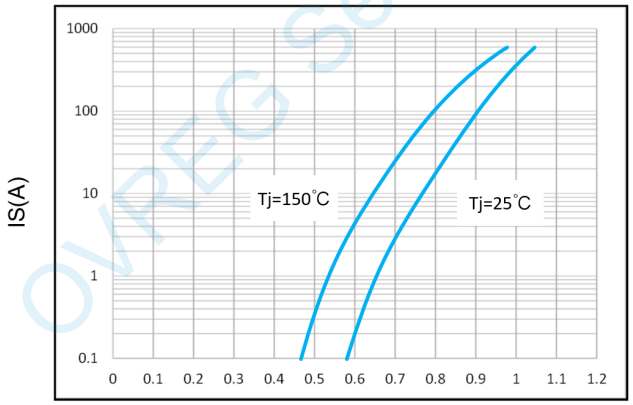

Capacitance Characteristics

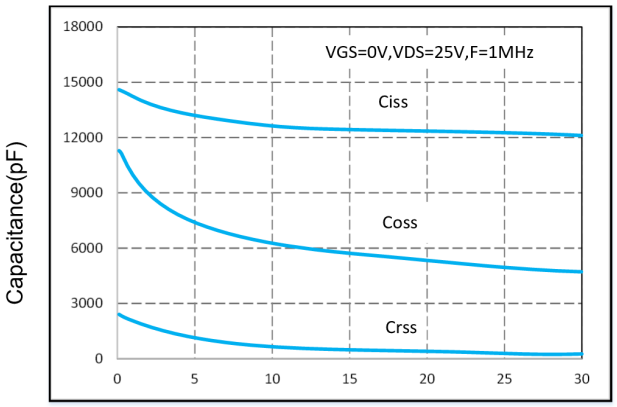

OVREG Semiconductor (xi'an) Co.,Ltd.

Test Circuit & Waveform

Gate Charge Test Circuit & Waveform

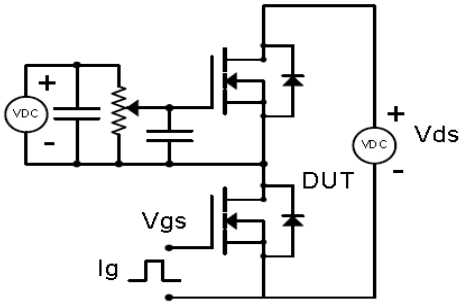

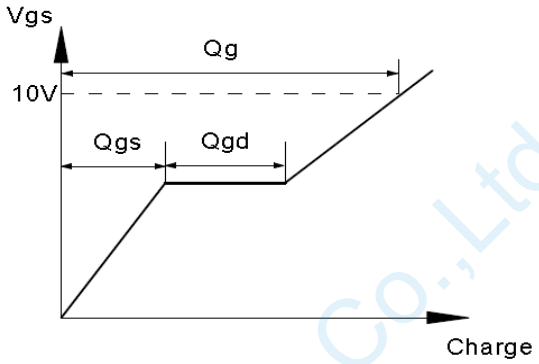

Resistive Switching Test Circuit & Waveforms

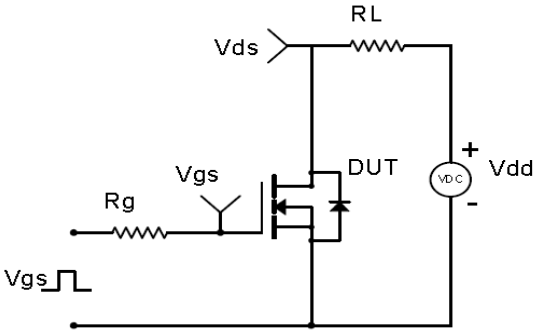

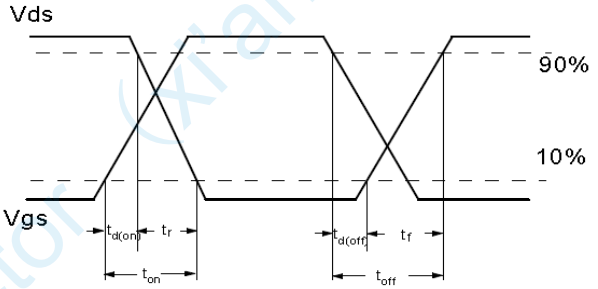

Unclamped Inductive Switching (UIS) Test Circuit & Waveforms

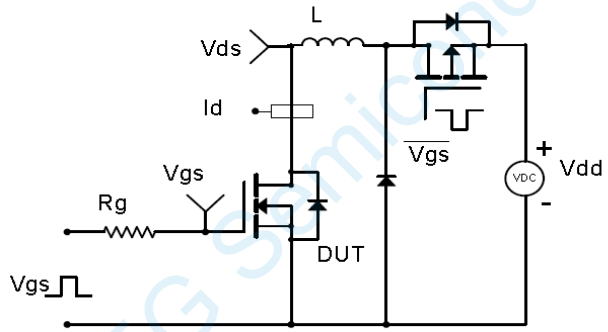

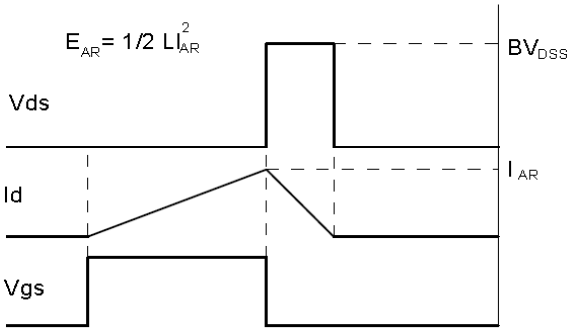

Diode Recovery Test Circuit & Waveforms

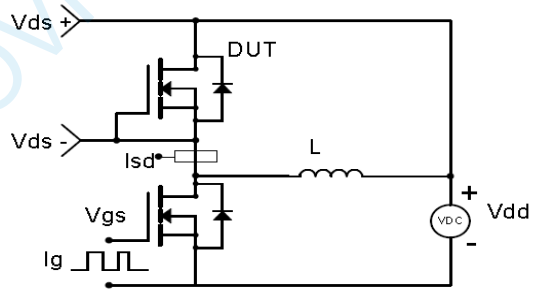

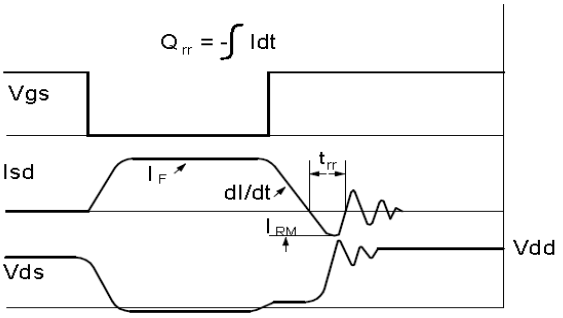

OVREG Semiconductor (xi'an) Co.,Ltd.

Package Information

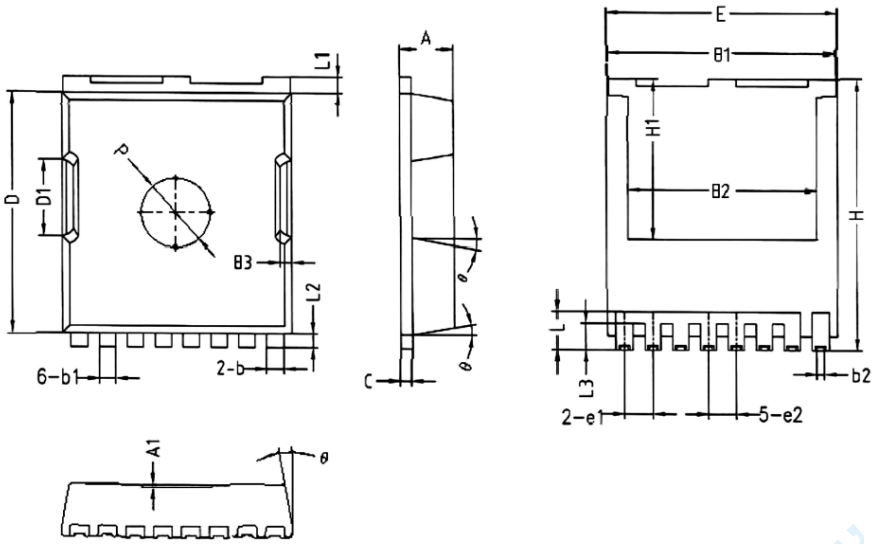

SYMBOL	MIN	NOM	MAX
A	2.2	2.3	2.4
A1	0	0.05	0.1
b	0.65	0.75	0.85
b1	0.6	0.7	0.8
b2	0.3	0.35	0.4
C	0.4	0.5	0.6
D	10.18	10.28	10.38
D1	3.15	3.3	3.45
E	9.7	9.9	10.1
E1	9.7	9.8	9.9
E2	8	8.1	8.2
E3	0.6	0.7	0.8
e1	1.175	1.225	1.275
e2	1.15	1.2	1.25
H	11.5	11.68	11.78
H1	6.8	6.95	7.1
L	1.4	1.6	1.8
L1	0.55	0.7	0.85
L2	0.5	0.6	0.7
L3	1	1.15	1.3
θ	0°	2.5°	8°
P	2.8	3	3.2

Ordering Information



OVREG----Logo
100N013TLA----Marking Code
xxxxxxxx----Date Code

Ordering Information

Part number	Type	Reel size	MOQ
OVM100N013TLA	T/R	13 inch	1800/reel

OVREG Semiconductor (xi'an) Co.,Ltd.