2V to 75V 200mW Zener Diode

Description

Type OVZP020VxxxD3 series are 2-pin Ultra super mini mold package zener diodes possessing an allowable power dissipation of 200mW.

Features

- ✧ Zener voltage from 2.0V to 75V
- ✧ 200mW Power Dissipation
- ✧ Low Zener Impedance
- ✧ High Stability and High Reliability

Applications

- ✧ Circuits for Constant Voltage
- ✧ Constant Current, Waveform clipper
- ✧ Surge absorber

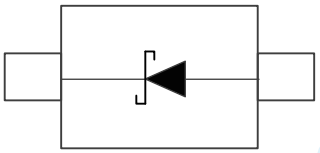

Circuit Diagram



SOD323

Absolute Maximum Rating （T_A = 25 °C, unless otherwise specified）

Rating	Symbol	Value	Units
Power Dissipation	P_D	200	mW
Forward Voltage	V_F	0.9	V
Typical thermal resistance junction to ambient	$R_{\theta JA}$	625	°C/W
Operating Temperature	Tj	-55 ~ +150	℃
Storage Temperature	T_{stg}	-55 ~ +150	℃

OVREG Semiconductor (xi'an) Co.,Ltd.

Electrical Characteristics （T_A = 25 °C, unless otherwise specified）

Part Number	Zener Voltage V_Z(V)			Dynamic Impedance ZZT(Ω)		Dynamic Impedance ZZK(Ω)		Reverse current IR(uA)		Marking
	Min	Max	I_Z(mA)	Max	I_Z(mA)	Max	I_Z(mA)	Max	at V_R(V)	
OVZP020V020D3	1.8	2.15	5	150	5	600	1	100	1	WY
OVZP020V024D3	2.2	2.6	5	100	5	600	1	50	1	WX
OVZP020V027D3	2.5	2.9	5	100	5	600	1	20	1	W1
OVZP020V030D3	2.8	3.2	5	95	5	600	1	10	1	W2
OVZP020V033D3	3.1	3.5	5	95	5	600	1	5	1	W3
OVZP020V036D3	3.4	3.8	5	90	5	600	1	5	1	W4
OVZP020V039D3	3.7	4.1	5	90	5	600	1	3	1	W5
OVZP020V043D3	4.0	4.6	5	90	5	600	1	3	1	W6
OVZP020V047D3	4.4	5.0	5	80	5	500	1	3	2	W7
OVZP020V051D3	4.8	5.4	5	60	5	480	1	2	2	W8
OVZP020V056D3	5.2	6.0	5	40	5	400	1	1	2	W9
OVZP020V062D3	5.8	6.6	5	10	5	150	1	3	4	WA
OVZP020V068D3	6.4	7.2	5	15	5	80	1	2	4	WB
OVZP020V075D3	7.0	7.9	5	15	5	80	1	1	5	WC
OVZP020V082D3	7.7	8.7	5	15	5	80	1	0.7	5	WD
OVZP020V091D3	8.5	9.6	5	15	5	100	1	0.5	6	WE
OVZP020V100D3	9.4	10.6	5	20	5	150	1	0.2	7	WF
OVZP020V110D3	10.4	11.6	5	20	5	150	1	0.1	8	WG
OVZP020V120D3	11.4	12.7	5	25	5	150	1	0.1	8	WH
OVZP020V130D3	12.4	14.1	5	30	5	170	1	0.1	8	WI
OVZP020V150D3	13.8	15.6	5	30	5	200	1	0.1	10.5	WJ
OVZP020V160D3	15.3	17.1	5	40	5	200	1	0.1	11.2	WK
OVZP020V180D3	16.8	19.1	5	45	5	225	1	0.1	12.6	WL
OVZP020V200D3	18.8	21.2	5	55	5	225	1	0.1	14	WM
OVZP020V220D3	20.8	23.3	5	55	5	250	1	0.1	15.4	WN
OVZP020V240D3	22.8	25.6	5	70	5	250	1	0.1	16.8	WO
OVZP020V270D3	25.1	28.9	2	80	2	300	0.5	0.1	18.9	WP
OVZP020V300D3	28	32	2	80	2	300	0.5	0.1	21	WQ
OVZP020V330D3	31	35	2	80	2	325	0.5	0.1	23.1	WR
OVZP020V360D3	34	38	2	90	2	350	0.5	0.1	25.2	WS
OVZP020V390D3	37	41	2	130	2	350	0.5	0.1	27.3	WT
OVZP020V430D3	40	46	2	100	2	700	1	0.1	32	WU
OVZP020V470D3	44	50	2	100	2	750	1	0.1	35	WV
OVZP020V510D3	48	54	2	100	2	750	1	0.1	38	WW
OVZP020V560D3	52	60	2	135	2	700	1	0.1	39	XW
OVZP020V620D3	58	66	2	200	2	1000	1	0.2	47	6E
OVZP020V680D3	64	72	2	250	2	1000	1	0.2	52	6F
OVZP020V750D3	70	79	2	300	2	1000	1	0.2	57	6H

OVREG Semiconductor (xi'an) Co.,Ltd.

Forward Current vs. Forward Voltage

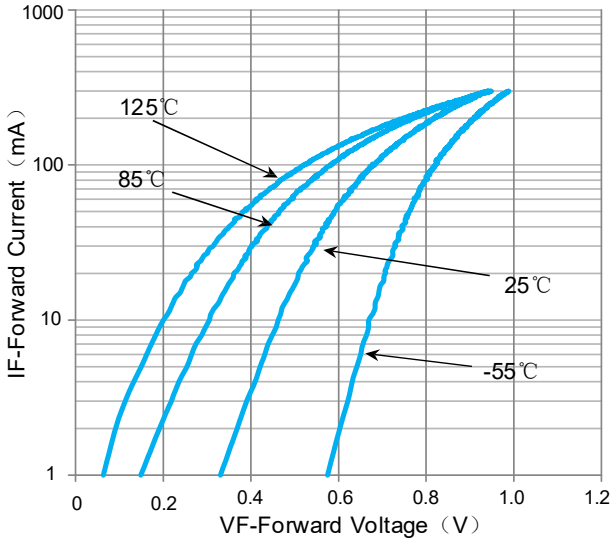

Reverse Characteristic

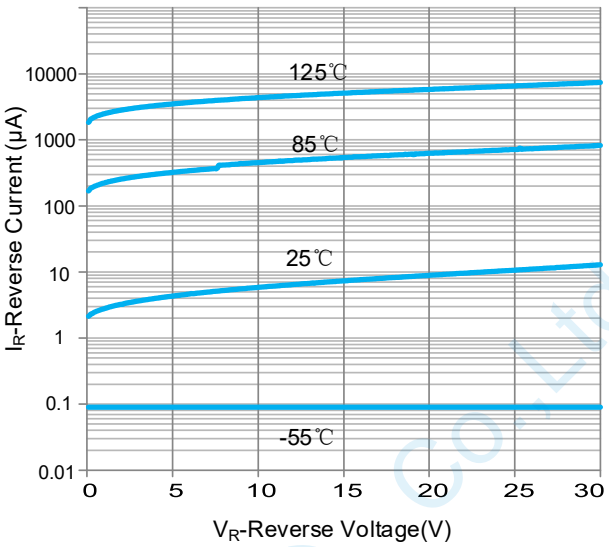

Typical Transient Thermal Impedance （℃/W）

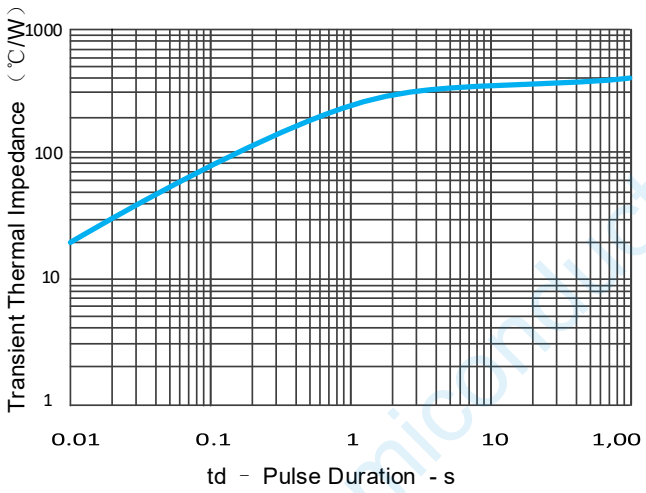

OVREG Semiconductor （xi'an） Co.,Ltd.

Package Information

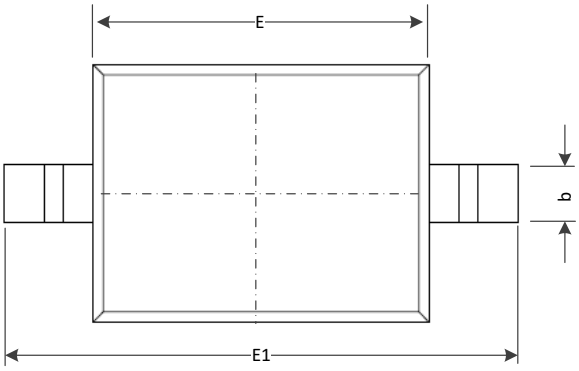

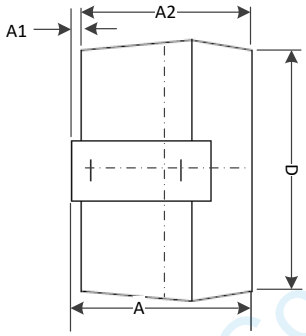

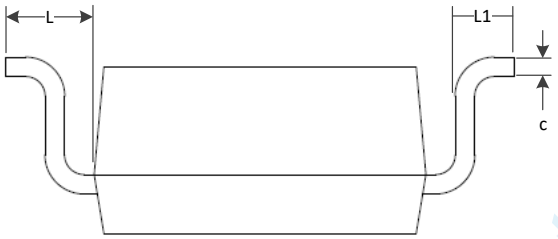

COMMOM DIMENSION (MM)			
PKG	SOD323		
Symbol	MIN.	NOM.	MAX.
A	0.800	0.950	1.100
A1	0.000	0.050	0.150
A2	0.800	0.850	0.950
b	0.250	0.300	0.400
c	0.080	-	0.150
D	1.200	1.300	1.400
E	1.400	1.600	1.800
E1	2.500	2.600	2.750
L	0.475 REF		
L1	0.200	0.300	0.450

Recommend PCB Layout

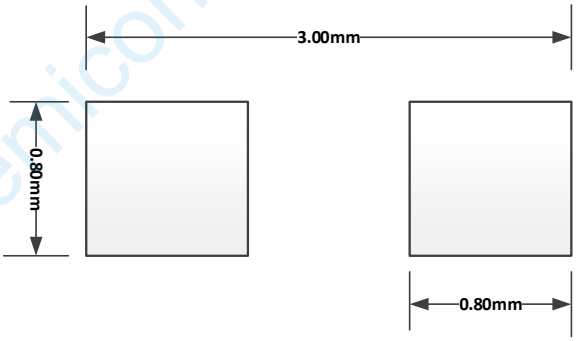

Notes: This PCB Layout Is For Reference Purposes Only

Marking

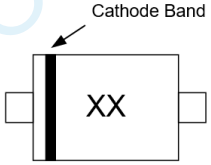

XX：Marking Code

Ordering Information

Part number	Material	Type	Reel size	MOQ	MOQ/internal box	MOQ/carton
OVZP020VxxxD3 Series	GREEN	T/R	7 inch	3k/reel	10reel= 30k/box	4boxes=120k/carton