# 600kHz 18V 3A Synchronous COT Step-Down Converter

## Features

- 70mΩ/35mΩ Low $R_{DS(ON)}$ internal FETs
- High Efficiency Synchronous-Mode Operation
- Wide Input Range:4.5V to 18V
- Output Voltage from
  0.8V(OV3253)
  0.6V(OV3253S)
  0.765V(OV3253T)
- 600kHz Switch Frequency
- Up to 3A, 3.5A@1.2V Output Current
- COT control to achieve fast transient responses
- Power Save Mode at Light Load
- Integrated internal compensation
- Stable with Low ESR Ceramic Output Capacitors
- Over Current Protection with Hiccup Mode
- Thermal Shutdown
- Inrush Current Limit and Soft Start
- Build in Input Over Voltage Protection
- Available in SOT23-6 Package

## Description

The OV3253/S/T is a high efficiency 600kHz, Constant on-Time (COT) control mode synchronous step-down DC-DC converter capable of delivering up to 3A current. OV3253/S/T integrates main switch and synchronous switch with very low $R_{DS(ON)}$ to minimize the conduction loss. Low output voltage ripple and small external inductor and capacitor size are achieved with 600kHz switching frequency. It adopts the COT architecture to achieve fast transient responses for high voltage step down applications. The OV3253/S/T requires a minimum number of readily available standard external components and is available in a 6-pin SOT23-6 ROHS compliant package.

## Application

- Digital Set Top Boxes
- Flat Panel Television and Monitors
- Notebook computer
- Wireless and DSL Modems

## Typical Application

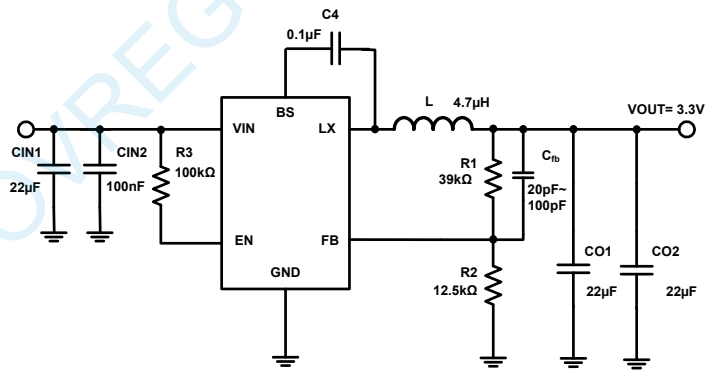


OV3253 Typical Application Circuits ($V_{REF}$=0.8V)

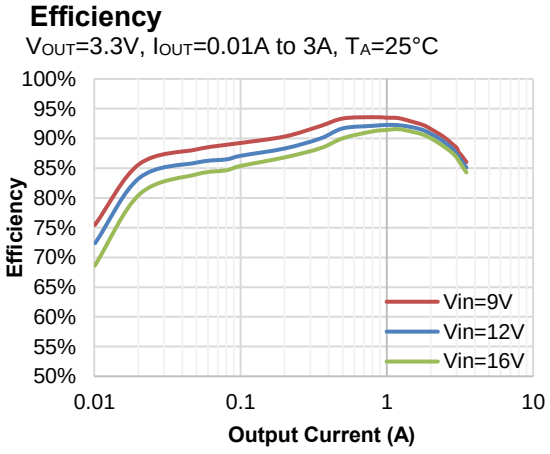


OVREG Semiconductor (Xi'an) Co.,Ltd.

## Absolute Maximum Ratings(Note 1)

| Parameter | Min | Max | Unit |
|---|---|---|---|
| Input Supply Voltage, EN | -0.3 | 20 | V |
| LX Voltages | -0.3 | 20 | V |
| FB Voltage | -0.3 | 6 | V |
| BS Voltage | -0.3 | 23 | V |
| Storage Temperature Range | -65 | 150 | °C |
| Junction Temperature (Note2) | 160 | | °C |
| Power Dissipation | 1000 | | mW |
| Lead Temperature (Soldering, 10s) | 260 | | °C |

## Package

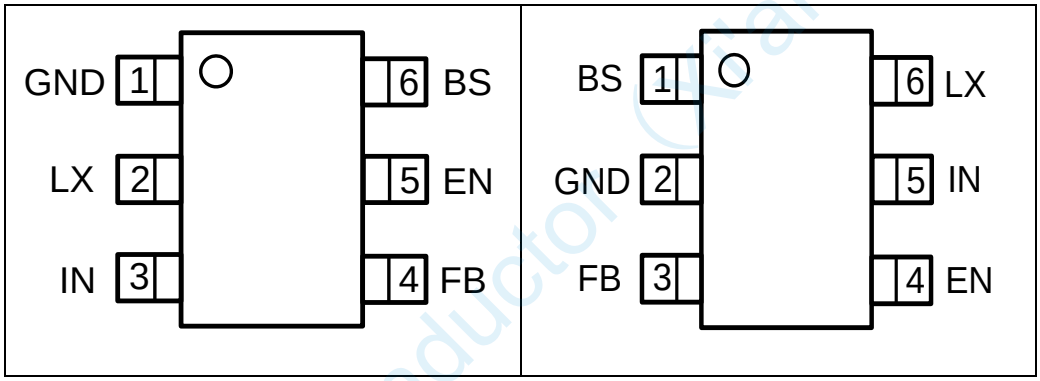


**SOT23-6**
**Top Marking: TM3XXX / TT3XXX**
**TM3/TT3: Device Code**
**XXX: Inside Code**

**SOT23-6**
**Top Marking: TS3XXX**
**TS3: Device Code**
**XXX: Inside Code**

## Order Information

| Part Number | Package | Top Marking | Quantity/Reel |
|---|---|---|---|
| OV3253 | SOT23-6 | TM3XXX | 3000 |
| OV3253S | SOT23-6 | TS3XXX | 3000 |
| OV3253T | SOT23-6 | TT3XXX | 3000 |

OV3253/S/T devices are Pb-free and RoHS compliant.

OVREG Semiconductor (Xi'an) Co.,Ltd.

## Pin Functions

| Pin | | Name | Function |
|---|---|---|---|
| OV3253/T | OV3253S | | |
| 1 | 2 | GND | Ground Pin |
| 2 | 6 | LX | Switching Pin |
| 3 | 5 | IN | Power supply Pin |
| 4 | 3 | FB | Output Voltage feedback input. Connect FB to the center point of the external resistor divider. |
| 5 | 4 | EN | Drive this pin to a logic-high to enable the IC. Drive to a logic-low to disable the IC and enter micro-power shutdown mode. Don't floating EN. |
| 6 | 1 | BS | Bootstrap. A capacitor connected between LX and BS pins is required to form a floating supply across the high-side switch driver. |

## ESD Rating

| Items | Description | Value | Unit |
|---|---|---|---|
| $V_{ESD_HBM}$ | Human Body Model for all pins | ±2000 | V |
| $V_{ESD_CDM}$ | Charged Device Model for all pins | ±2000 | V |

JEDEC specification JS-001

## Recommended Operating Conditions

| Items | Description | Min | Max | Unit |
|---|---|---|---|---|
| Voltage Range | IN | 4.5 | 18 | V |
| $T_J$ | Operating Junction Temperature | -40 | 125 | °C |

## Thermal Resistance (Note3)

| Items | Description | Value | Unit |
|---|---|---|---|
| $\theta_{JA}$ | Junction-to-ambient thermal resistance | 100 | °C/W |
| $\theta_{JC}$ | Junction-to-case(top) thermal resistance | 56 | °C/W |

OVREG Semiconductor (Xi'an) Co.,Ltd.

## Electrical Characteristics

**$V_{IN}$=12V, $V_{OUT}$=3.3V, $T_A$ = 25°C, unless otherwise noted.**

| Parameter | Conditions | Min | Typ | Max | Units |
|---|---|---|---|---|---|
| Input Voltage Range | | 4.5 | | 18 | V |
| OVP Threshold | | 18.7 | 19.3 | 19.8 | V |
| UVLO Rising Threshold | | 4.0 | 4.2 | 4.35 | V |
| UVLO Hysteresis | | 0.4 | 0.45 | 0.5 | V |
| Quiescent Current | $V_{EN}$=2V, $V_{FB}$=$V_{REF}$ x 105% | | 300 | | μA |
| Shutdown Current | $V_{IN}$=12V, EN=0V | | 5 | 10 | μA |
| Regulated Feedback Voltage(3253) | $T_A$=25°C,4.5V≤$V_{IN}$≤18V | 0.784 | 0.8 | 0.816 | V |
| Regulated Feedback Voltage(3253S) | $T_A$=25°C,4.5V≤$V_{IN}$≤18V | 0.588 | 0.6 | 0.612 | V |
| Regulated Feedback Voltage(3253T) | $T_A$=25°C,4.5V≤$V_{IN}$≤18V | 0.750 | 0.765 | 0.780 | V |
| High-Side Switch On-Resistance | | | 70 | | mΩ |
| Low-Side Switch On-Resistance | | | 35 | | mΩ |
| High-Side Switch Leakage Current | $V_{EN}$=0V, $V_{LX}$=0V | 1 | | 10 | μA |
| Switch Valley Current Limit | Minimum Duty Cycle | 3.7 | 4 | 4.5 | A |
| On Time | $V_{IN}$=12V, $V_{OUT}$=1.2V, $I_{OUT}$=1A | 132 | 166 | 200 | ns |
| Oscillation Frequency | | 500 | 600 | 700 | kHz |
| Maximum Duty Cycle | | | 65 | | % |
| Minimum On-Time(Note 4) | | 70 | 80 | 100 | ns |
| Soft Start Time | | 0.7 | 1 | 1.3 | ms |
| Hiccup on Time(Note 4) | | | 1.2 | | ms |
| Hiccup Time Before Restart(Note 4) | | | 3.6 | | ms |
| EN Rising Threshold | | 0.85 | 0.95 | 1.05 | V |
| EN Falling Threshold | | 0.75 | 0.85 | 0.95 | V |
| EN Hysteresis | | | 100 | | mV |
| Thermal Shutdown Threshold (Note 4) | | | 165 | | °C |
| Thermal Shutdown Hysteresis (Note 4) | | | 30 | | °C |

**Note 1**: Absolute Maximum Ratings are those values beyond which the life of a device may be impaired.

**Note 2**: $T_J$ is calculated from the ambient temperature $T_A$ and power dissipation $P_D$ according to the following formula: $T_J = T_A + P_D \times \theta_{JA}$. The maximum allowable continuous power dissipation at any ambient temperature is calculated by $P_{D\,(MAX)} = (T_{J(MAX)}-T_A)/\theta_{JA}$.

**Note 3**: Measured on JESD51-7, 4-layer PCB.

**Note 4:** Guaranteed by design.

OVREG Semiconductor (Xi'an) Co.,Ltd.

# Block Diagram

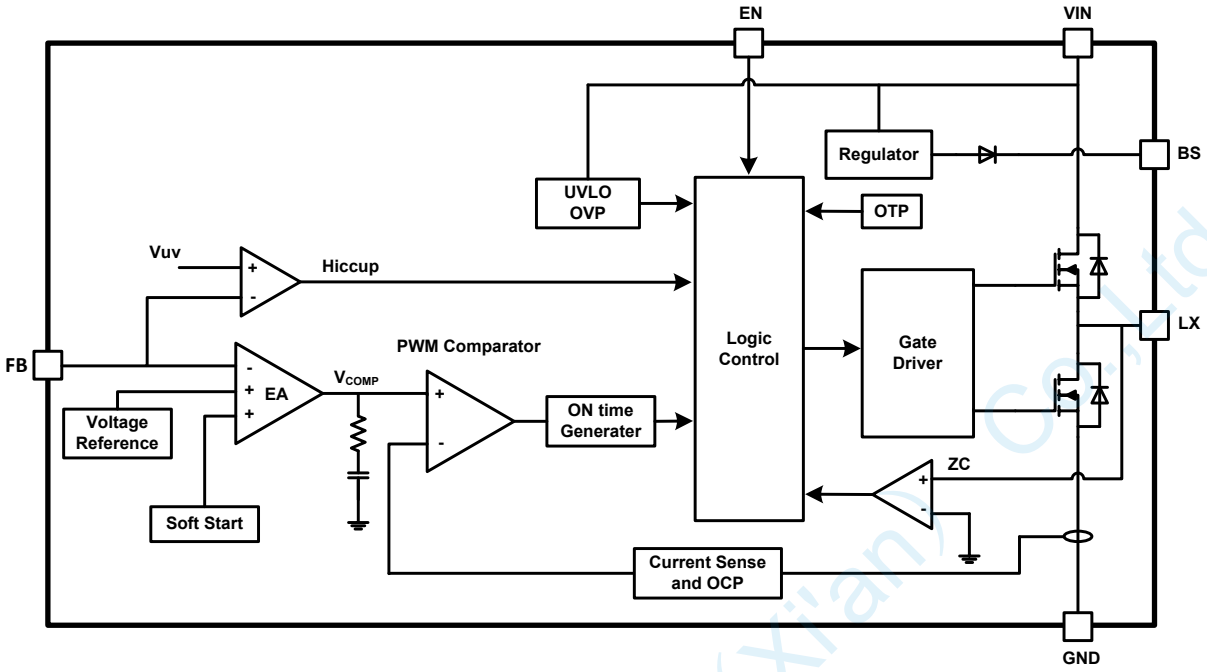


**Figure 1. OV3253 /OV3253T/OV3253S Block Diagram**

# Operation Description

## Internal Regulator

The OV3253/T/S is a constant on-time (COT) step down DC/DC converter that provides excellent transient response with no extra external compensation components. This device contains low resistance, high voltage high side and low side power MOSFETs, and operates at 600kHz operating frequency to ensure a compact, high efficiency design with excellent AC and DC performance.

## Error Amplifier

OV3253/T/S adopts operational transconductance amplifier (OTA) as error amplifier. The error amplifier compares the FB pin voltage with the internal FB reference ($V_{REF}$) and outputs a current proportional to the difference between the two. This output current is then used to charge or discharge the internal compensation network to form the $V_{COMP}$ voltage, which is used to compare with the low side power MOSFET current sensing signal and trigger on time pulse. The optimized internal compensation network minimizes the external component counts and simplifies the control loop design.

OVREG Semiconductor (Xi'an) Co.,Ltd.

### Internal Soft-Start

The soft-start is implemented to prevent the converter output voltage from overshooting during startup. When the chip starts, the internal circuitry generates a soft-start voltage (SS) ramping up from 0V to $V_{REF}$. When it is lower than the internal FB reference ($V_{REF}$), SS overrides REF so the error amplifier uses SS as the reference. When SS is higher than $V_{REF}$, $V_{REF}$ regains control. The SS time is internally fixed to 1ms typically.

### Over-Current-Protection and Short Circuits Protection

The OV3253/T/S has cycle-by-cycle valley current limit function. When the inductor current valley value is larger than the valley current limit during low side MOSFET on state, the device enters into valley over current protection mode and low side MOSFET keeps on state until inductor current drops down to the value equal or lower than the valley current limit, and then on time pulse could be generated and high side MOSFET could turn on again.

If the output is short to GND and the output voltage drop until feedback voltage $V_{FB}$ is below the output under-voltage $V_{UV}$ threshold which is typically 55% of $V_{REF}$, OV3253/T/S enters into hiccup mode to periodically disable and restart switching operation. The hiccup mode helps to reduce power dissipation and thermal rise during output short condition. The period of OV3253/T/S hiccup mode is typically 4.8ms.

### Startup and Shutdown

If both VIN and EN are higher than their appropriate thresholds, the chip starts switching operation. The reference block starts first, generating stable reference voltage and currents, and then the internal regulator is enabled. The regulator provides stable supply for the remaining circuitries. Three events can shut down the chip: EN low, VIN low and thermal shutdown. In the shutdown procedure, the signaling path is first blocked to avoid any fault triggering. The $V_{COMP}$ voltage and the internal supply rail are then pulled down. The floating driver is not subject to this shutdown command.

## Application Information

### Setting the Output Voltage

The external resistor divider is used to set the output voltage (see Typical Application on page 1). Choose R1 to be around 39kΩ for optimal transient response. R2 is then given by:

**Table 1: Selection for Common Output Voltages ($V_{FB}$=0.8V)**

| $V_{OUT}$ (V) | R1 (kΩ) | R2 (kΩ) | $C_{FB}$(pF) | L (μH) |
|---|---|---|---|---|
| 5 | 39 | 7.43 | 33 | 4.7 |
| 3.3 | 39 | 12.5 | 33 | 4.7 |
| 2.5 | 39 | 18.3 | 33 | 3.3 |
| 1.8 | 39 | 31.2 | 33 | 2.2 |
| 1.5 | 39 | 44.6 | 33 | 2.2 |
| 1.2 | 39 | 78 | 33 | 1.5 |
| 1 | 18 | 72 | 33 | 1.0 |

$$R_2 = \frac{R_1}{V_{out}/V_{FB} - 1}$$

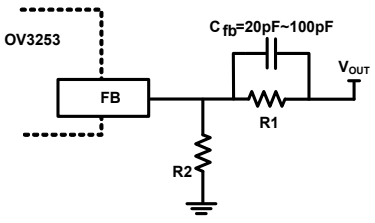


**Figure 2. Feedback Network**

## Selecting the Inductor

A 1.0μH to 4.7μH inductor with a DC current rating of at least 25% percent higher than the maximum load current is recommended for most applications. For highest efficiency, the inductor DC resistance should be as small as possible. For most designs, the inductance value can be derived from the following equation.

$$L = \frac{V_{out} \times (V_{in} - V_{out})}{V_{in} \times \Delta I_L \times f_{OSC}}$$

Where $\Delta I_L$ is the inductor ripple current. Choose inductor ripple current to be approximately 30% if the maximum load current 3A. The maximum inductor peak current is:

$$I_{L(MAX)} = I_{LOAD} + \frac{\Delta I_L}{2}$$

Under light load conditions below 100mA, larger inductance is recommended for improved efficiency.

## Selecting the Output Capacitor

The output capacitor (Co1 and Co2) is required to maintain the DC output voltage. Ceramic, tantalum, or low ESR electrolytic capacitors are recommended. Low ESR capacitors are preferred to keep the output voltage ripple low. The output voltage ripple can be estimated by:

$$\Delta V_{OUT} = \frac{V_{OUT}}{f_S \times L} \times \left[1 - \frac{V_{OUT}}{V_{IN}}\right] \times \left[R_{ESR} + \frac{1}{8 \times f_S \times C_2}\right]$$

Where L is the inductor value and $R_{ESR}$ is the equivalent series resistance (ESR) value of the output capacitor. In the case of ceramic capacitors, the impedance at the switching frequency is dominated by the capacitance. The output voltage ripple is mainly caused by the capacitance. For simplification, the output voltage ripple can be estimated by:

$$\Delta V_{OUT} = \frac{V_{OUT}}{8 \times f_S^{\,2} \times L \times C_2} \times \left[1 - \frac{V_{OUT}}{V_{IN}}\right]$$

In the case of tantalum or electrolytic capacitors, the ESR dominates the impedance at the switching frequency. For simplification, the output ripple can be approximated to:

$$\Delta V_{OUT} = \frac{V_{OUT}}{f_S \times L} \times \left[1 - \frac{V_{OUT}}{V_{IN}}\right] \times R_{ESR}$$

The characteristics of the output capacitor also affect the stability of the regulation system. The OV3253 can be optimized for a wide range of capacitance and ESR values.

OVREG Semiconductor (Xi'an) Co.,Ltd.

# Typical Performance Characteristics

### Efficiency

$V_{OUT}$ =3.3V, L=4.7μH, DCR=30mΩ

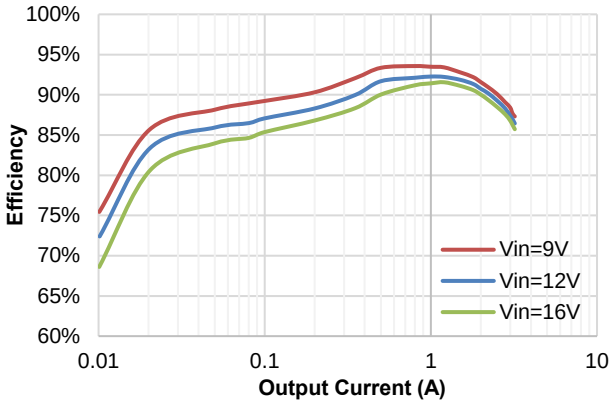


### Efficiency

$V_{OUT}$ =5V, L=4.7μH, DCR=30mΩ

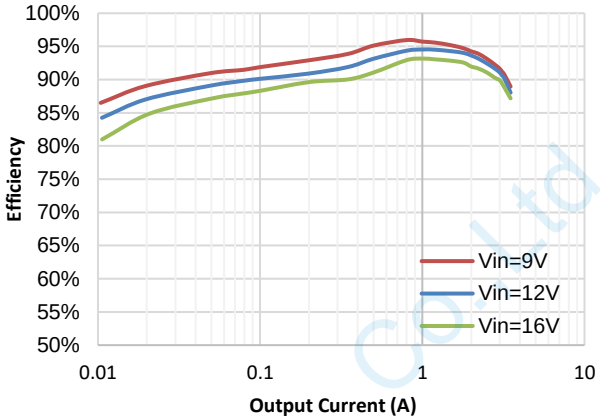


### Efficiency

$V_{OUT}$=1.2V, L=2.2μH, DCR=20mΩ

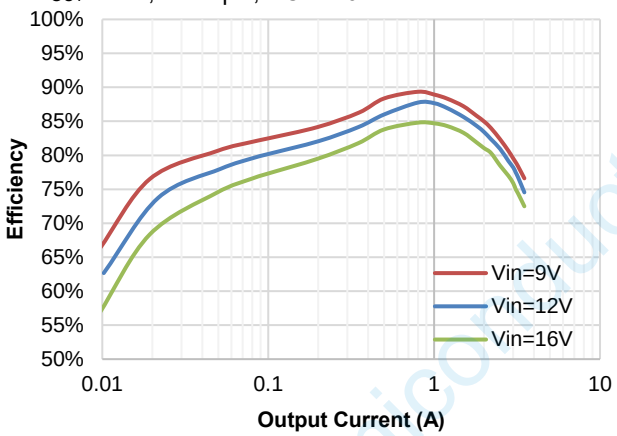


### Load Regulation

$V_{IN}$=12V, $T_A$=25°C

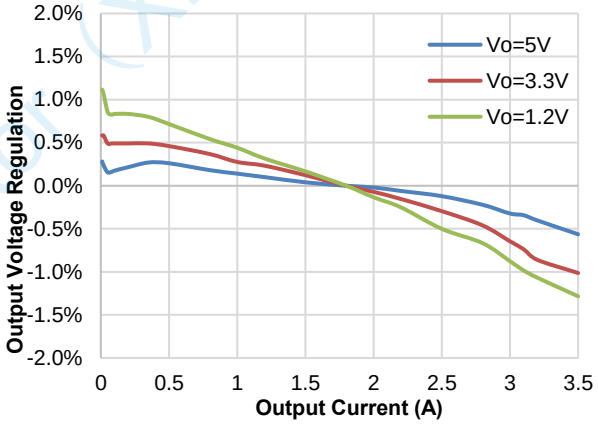


### Steady State Operation

$V_{IN}$ =12V, $V_{OUT}$ =3.3V, No Load

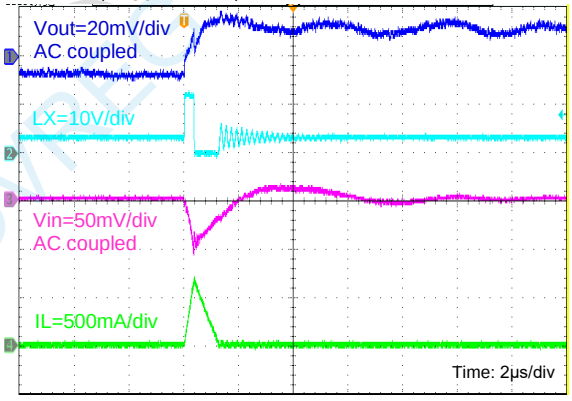


### Steady State Operation

$V_{IN}$ =12V, $V_{OUT}$ =3.3V, $I_o$=Full Load

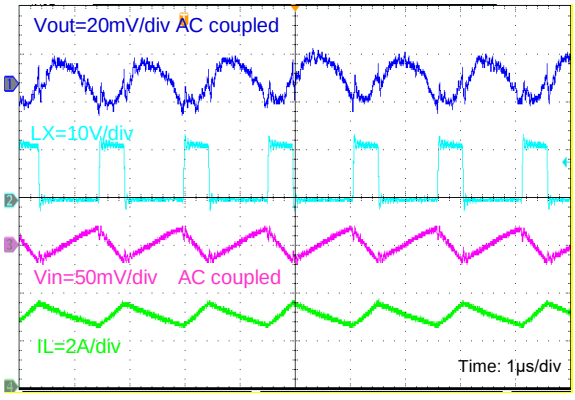


OVREG Semiconductor (Xi'an) Co.,Ltd.

## Typical Performance Characteristics(continued)

### Load Transient

$V_{IN}$ =12V, $V_{OUT}$ =3.3V, $I_o$ =0A to 3A

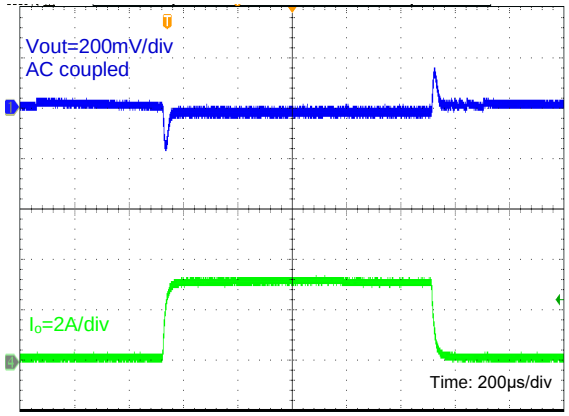


### Load Transient

$V_{IN}$ =12V, $V_{OUT}$ =3.3V, $I_o$ =1.5A to 3A

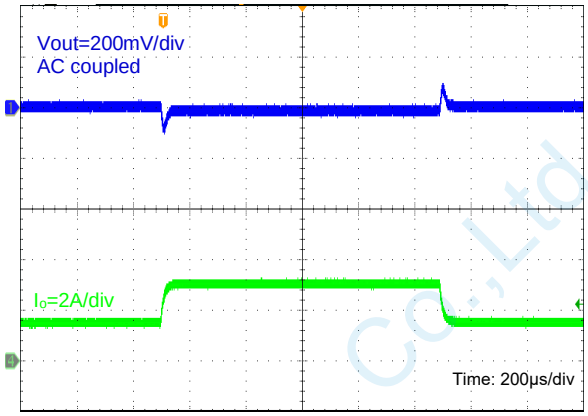


### Output Short Entry

$V_{IN}$ =12V, $V_{OUT}$ =3.3V, No Load

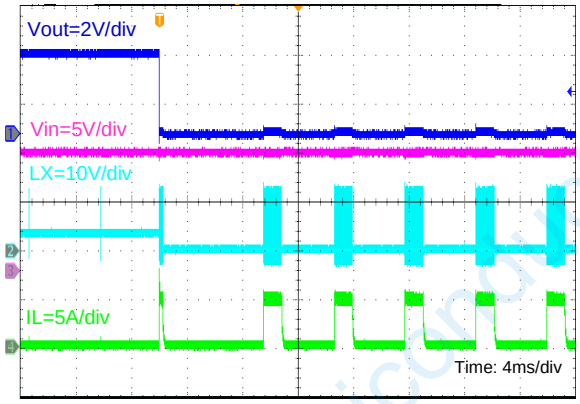


### Output Short Recovery

$V_{IN}$=12V, $V_{OUT}$ =3.3V, No Load

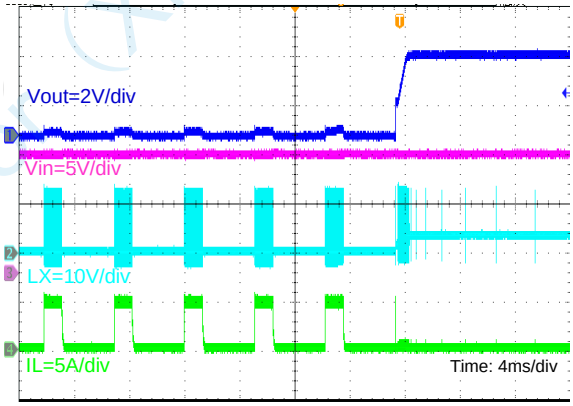


### Input Power On

$V_{IN}$ =12V, $V_{OUT}$ =3.3V, $I_o$ =Full Load

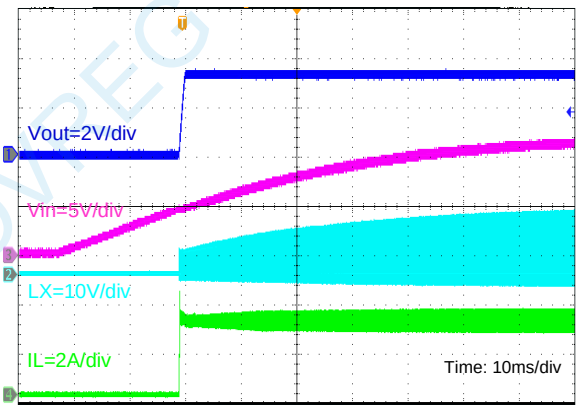


### Input Power Down

$V_{IN}$ =12V, $V_{OUT}$ =3.3V, $I_o$ =Full Load

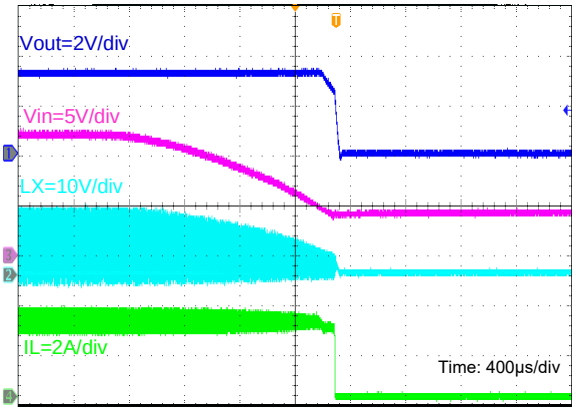


OVREG Semiconductor (Xi'an) Co.,Ltd.

## Typical Performance Characteristics(continued)

**EN Enable**

$V_{IN}$ =12V, $V_{OUT}$ =3.3V, $I_o$ =Full Load

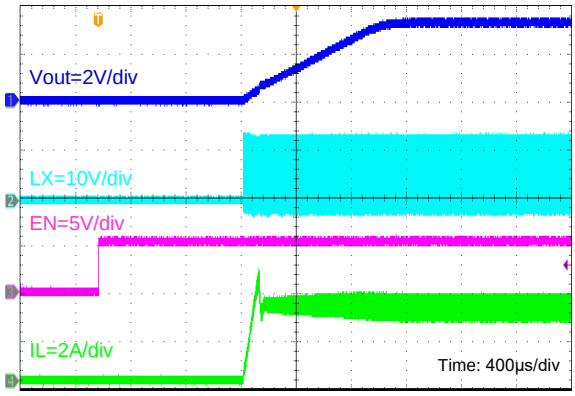


**EN Disable**

$V_{IN}$ =12V, $V_{OUT}$ =3.3V, $I_o$ =Full Load

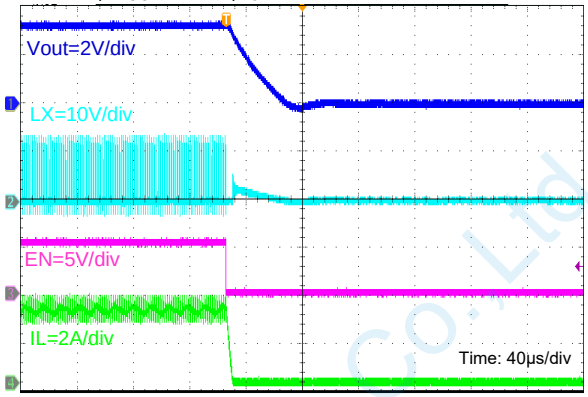


## Typical Application Circuits

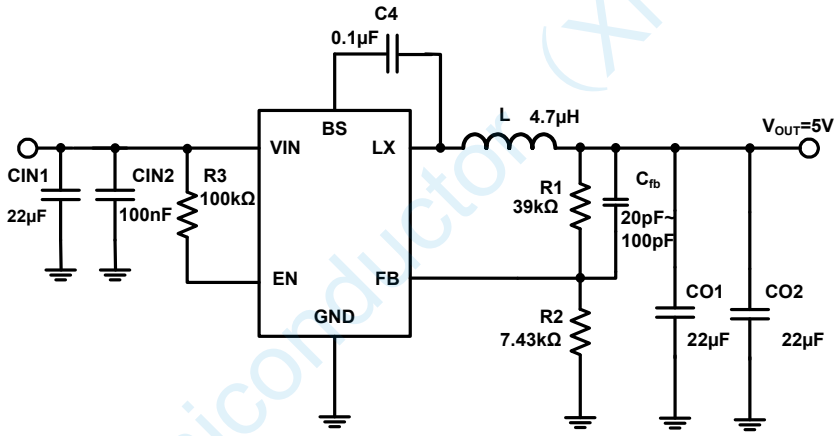


**Figure 4. 12$V_{IN}$, 5V Output ($V_{FB}$=0.8V)**

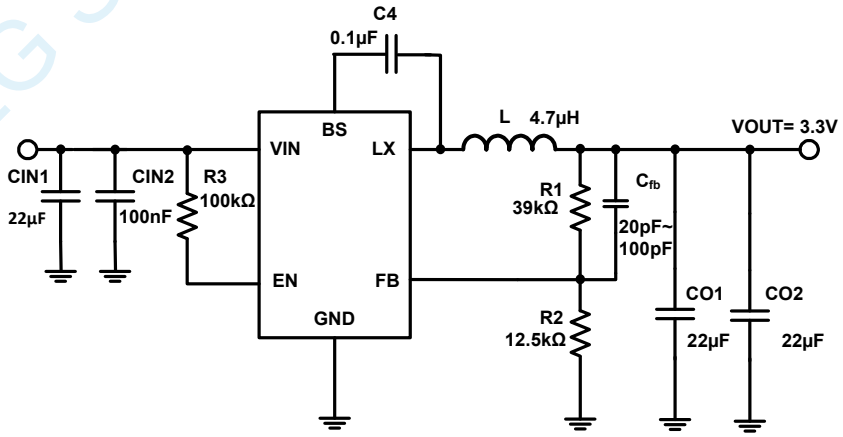


**Figure 5. 12$V_{IN}$, 3.3V Output ($V_{FB}$=0.8V)**

OVREG Semiconductor (Xi'an) Co.,Ltd.

## Typical Application Circuits(continued)

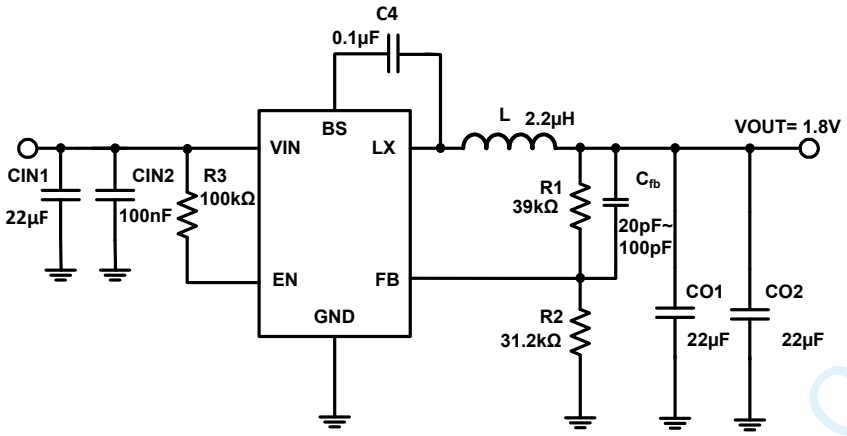


Figure 6. 12$V_{IN}$, 1.8V Output ($V_{FB}$=0.8V)

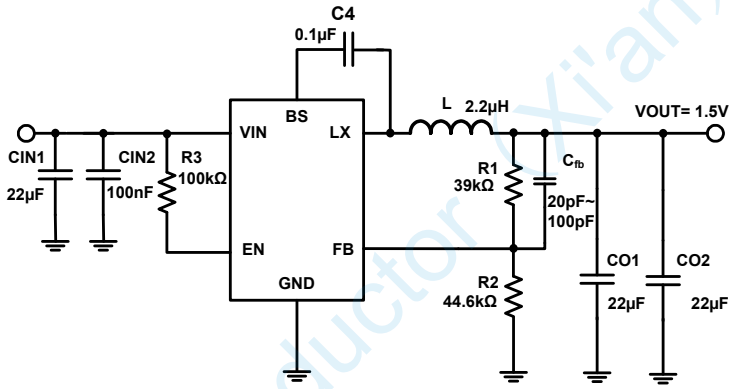


Figure 7. 12$V_{IN}$, 1.5V Output ($V_{FB}$=0.8V)

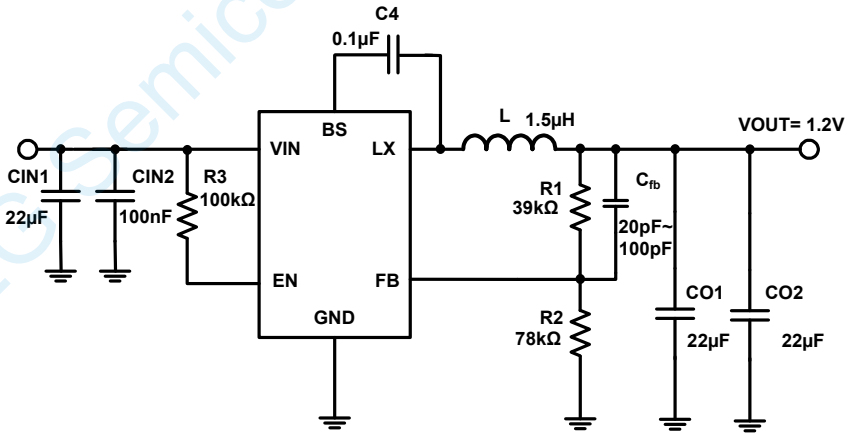


Figure 8. 12$V_{IN}$, 1.2V Output ($V_{FB}$=0.8V)

OVREG Semiconductor (Xi'an) Co.,Ltd.

## Typical Application Circuits(continued)

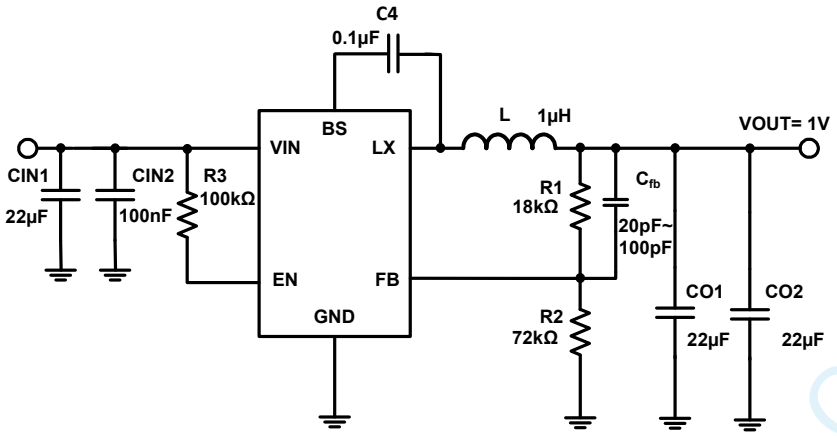


**Figure 9. 12$V_{IN}$, 1V Output ($V_{FB}$=0.8V)**

OVREG Semiconductor (Xi'an) Co.,Ltd.

## PCB Layout Guide

PCB layout is very important to achieve stable operation. It is highly recommended to duplicate EVB layout for optimum performance. If change is necessary, please follow these guidelines and take Figure 3 for reference.

1) Keep the path of switching current short and minimize the loop area formed by Input capacitor, IN pin and GND.

2) Bypass ceramic capacitors are suggested to be put close to the IN Pin.

3) Ensure all feedback connections are short and direct. Place the feedback resistors as close to the chip as possible.

4) VOUT, LX away from sensitive analog areas such as FB.

5) Connect IN, LX, and especially GND respectively to a large copper area to cool the chip to improve thermal performance and long-term reliability.

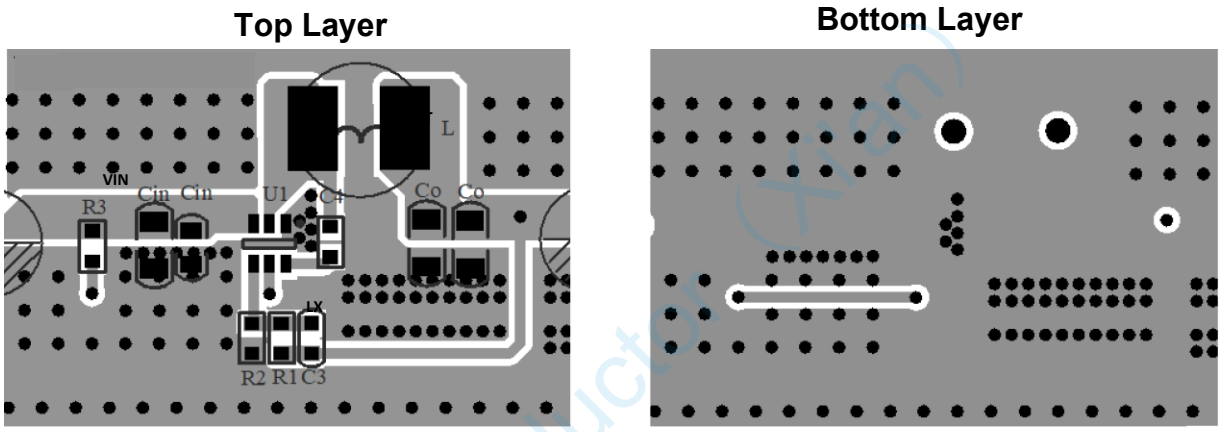


**Figure 3. Sample of PCB Layout(OV3253)**

OVREG Semiconductor (Xi'an) Co.,Ltd.

# Package Information

## SOT23-6

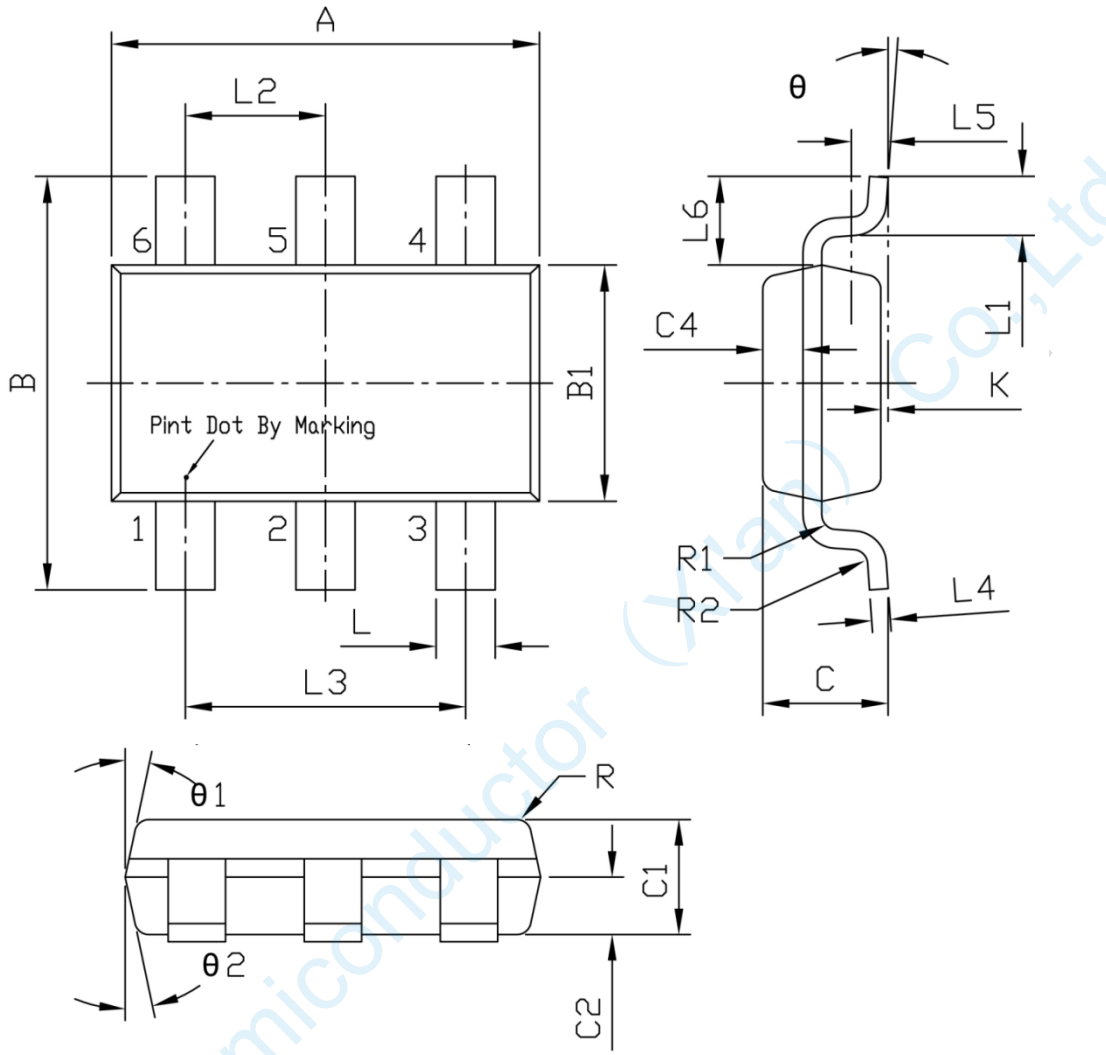


Unit: mm

| Symbol | Dimensions In Millimeters | | | Symbol | Dimensions In Millimeters | | |
|---|---|---|---|---|---|---|---|
| | Min | Typ | Max | | Min | Typ | Max |
| A | 2.80 | 2.90 | 3.00 | L3 | 1.800 | 1.900 | 2.000 |
| B | 2.60 | 2.80 | 3.00 | L4 | 0.077 | 0.127 | 0.177 |
| B1 | 1.50 | 1.60 | 1.70 | L5 | - | 0.250 | - |
| C | - | - | 1.05 | L6 | - | 0.600 | - |
| C1 | 0.60 | 0.80 | 1.00 | θ | 0° | | 0° |
| C2 | 0.35 | 0.40 | 0.45 | Θ1 | 10° | 12° | 14° |
| C4 | 0.223 | 0.273 | 0.323 | Θ2 | 10° | 12° | 14° |
| K | 0.000 | 0.075 | 0.150 | R | - | 0.100 | - |
| L | 0.325 | 0.400 | 0.475 | R1 | - | 0.100 | - |
| L1 | 0.325 | 0.450 | 0.550 | R2 | - | 0.100 | - |
| L2 | 0.850 | 0.950 | 1.050 | | | | |

OVREG Semiconductor (Xi'an) Co.,Ltd.

# Tape and Reel Information

## Tape Dimensions:

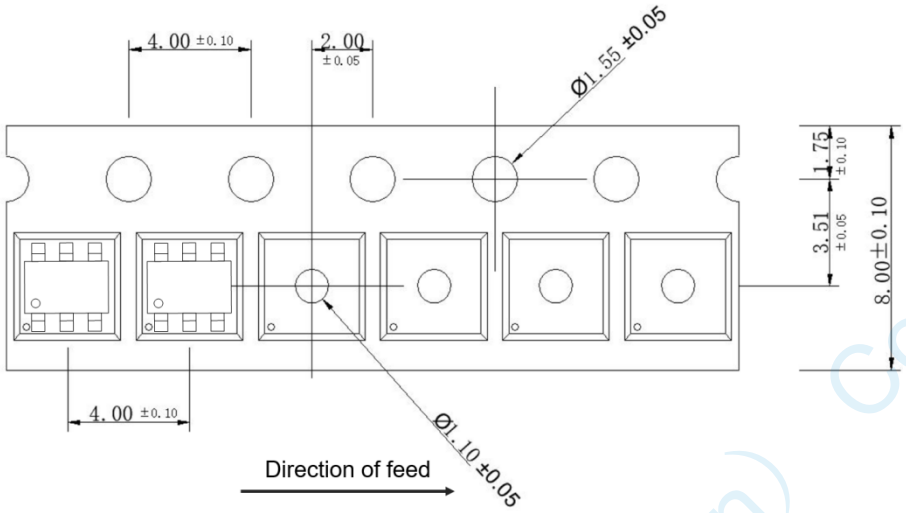


## Reel Dimensions:

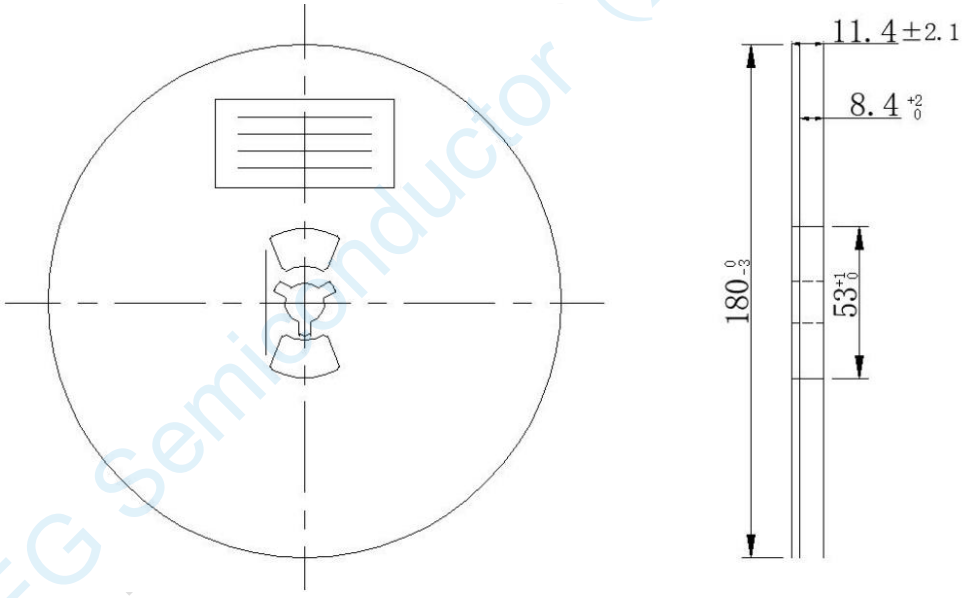


**Note:**

1) All Dimensions are in Millimeter
2) Quantity of Units per Reel is 3000
3) MSL level is Level 3.

OVREG Semiconductor (Xi'an) Co.,Ltd.