VFM Control Step-up Switching Regulator

The OV3251TR is a constant frequency, 6-pin SOT23 current mode step-up converter intended for small, low power applications. The OV3251TR switches at 1.4MHz and allows the use of tiny, low cost capacitors and inductors. Internal soft-start results in small inrush current and extends battery life.

The OV3251TR features automatic shifting to pulse frequency modulation mode at light loads. The OV3251TR includes under-voltage lockout, current limiting, and thermal overload protection to prevent damage in the event of an output overload.

Features

- ✧ Integrated 80mΩPower MOSFET
- ✧ 2V to 24V Input Voltage
- ✧ 1.4MHz Fixed Switching Frequency
- ✧ Internal 4A Switch Current Limit
- ✧ Adjustable Output Voltage
- ✧ Internal Compensation
- ✧ Up to 24V Output Voltage
- ✧ Automatic Pulse Frequency Modulation Mode
- ✧ at Light Loads
- ✧ up to 93% Efficiency

Applications

- ✧ Battery-Powered Equipment
- ✧ Set-Top Box
- ✧ Portable mobile devices
- ✧ Wireless communication equipment

Mechanical Data

- ✧ UL Flame Rating : UL94V-0
- ✧ Reel Size : 7 inch
- ✧ RoHS/WEEE Compliant

Pin Assignment

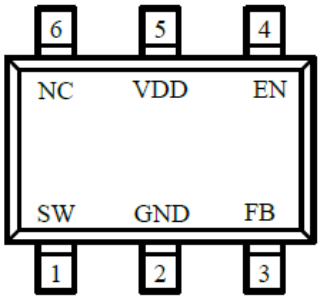

Pin Number	Pin Name	Function
1	SW	Switching Output
2	GND	Common Ground
3	FB	Feedback
4	EN	Chip Enable
5	VDD	Power Input
6	NC	No Connect

OVREG Semiconductor (xi'an) Co.,Ltd.

Absolute Maximum Rating at T_A = 25 °C, unless otherwise specified

Parameter	Symbol	Maximum Rating	Unit
Input voltage	VIN	Vss-0.3～Vss+24	V
Output voltage	VOUT	Vss-0.3～Vss+24	
	VSW	Vss-0.3～Vss+24	
Output Current	ISW	4	A
Power Dissipation	PD	250	mW
Operating ambient temperature	Topr	-40～＋80	°C
Storage ambient temperature	Tstg	-40～＋125	

Caution:
The absolute maximum ratings are rated values exceeding which the product could suffer physical damage. These values must therefore not be exceeded under any conditions.

Electrical Characteristics at T_A = 25 °C, unless otherwise specified

(VIN=1.5V，VOUT=3.3V)

Parameter	Symbol	Condition	Min	Typ	Max	Unit
Input supply voltage	VIN	-	2	-	24	V
Output supply voltage	VOUT	-	2.5	-	24	
VIN under voltage lockout threshold	UVLO_F	-	1.7	-	2	
VIN under voltage lockout hysteresis	UVLO_HYS	-	-	100	-	mV
Shutdown mode	IOFF	VEN<VENL	-	0.01	1	μA
I Quiescent Current (PFM)	I_PFM	VIN=3.6V，VOUT=5V	-	100	-	μA
FB Voltage	VR	VOUT=5V	588	600	612	mV
Switching frequency	FS	IOUT=1.2A	-	1.4	-	MHz
Maximum Duty Cycle	DMAX	VFB=0V	85	-	-	%
Internal power MOFFET resistance	RDSON	VIN=3.6V，ISW=2A		80	150	mΩ
SW Current Limit	ISW	VIN=4.2V	-	4	-	A
Load regulation	ΔVLINE	IOUT=1.2A, IN=3V~4.2V	-	0.4	-	%
Line regulation	ΔVLOAD	VIN=3.6V, IOUT=10mA~1.2A	-	0.45	-	%
EN Input High Voltage	VENH	VIN=3.6V	1.2	-	-	V
EN Input Low Voltage	VENL	VIN=3.6V	-	-	0.4	V
SW Leakage	ISW_L	VSW=20V			1	uA
Thermal Shutdown	TSHD	VIN=3.6V, IOUT=10mA	-	160	-	℃

OVREG Semiconductor (xi'an) Co.,Ltd.

Block Diagram

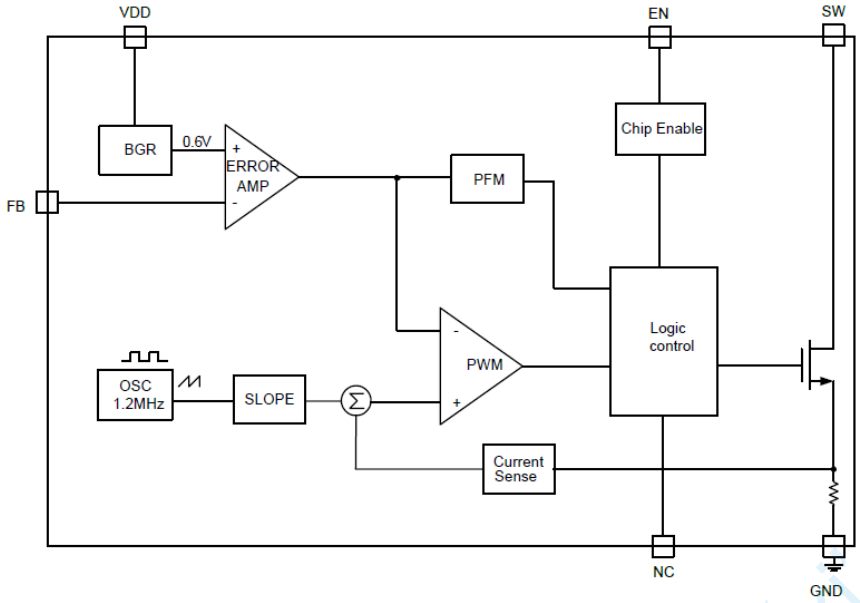

Typical Applications

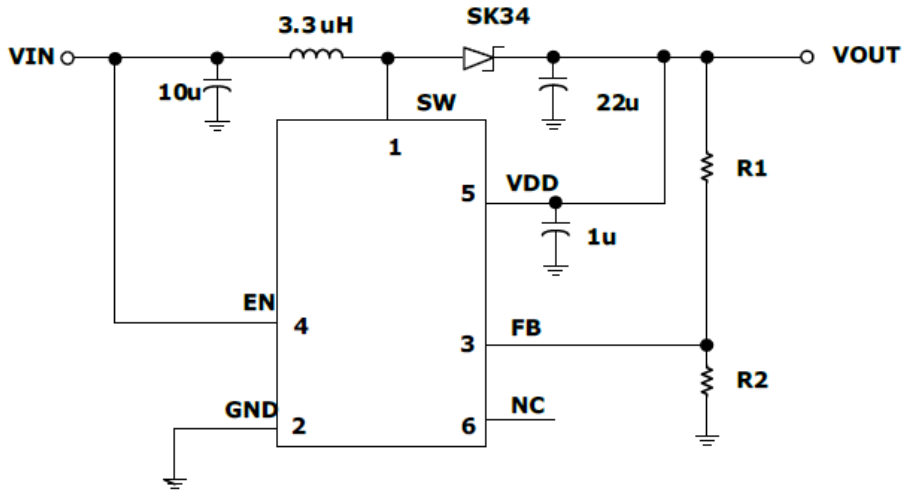

Note： The VDD terminal of the chip（Pin 5） can be connected to VOUT or VIN. When VIN<5V, it is recommended to connect to VOUT to enhance the drive capability

Setting the Output Voltage

Through the external resistance voltage division of FB, the output voltage value can be calculated according to the following formula;

$V_{OUT}=V_{FB}*（1+R1/R2）$

for example: R2 = 100K, R1 = 1.4M, V_{FB} = 0.6V, then Vout = 9V

Inductance selection

It is recommended to choose 3.3uh to 22uh for the range of inductance value. The selection of inductance mainly considers the smaller DCR resistance to ensure the higher efficiency.

Input and output capacitance

It is recommended to use more than 22uF for input capacitance and output capacitance. In order to get smaller output ripple, it is recommended to use ceramic capacitance for output. The 5-pin terminal needs 1uF capacitor for voltage stabilization. It is recommended to use ceramic capacitor.

Diode

Use fast response Schottky diode for continuous current diode. The lower the forward voltage drop, the higher the load efficiency. For different output voltage, the reverse withstand voltage of the continuous current diode should be high enough (> Vout + 5V) to prevent reverse leakage or breakdown.

PCB layout

In order to get better use effect, the main precautions for PCB layout are as follows:

Input capacitance and output capacitance shall be close to chip pin as much as possible;

The power path from VIN to inductance L to Vout shall be as short and thick as possible;

The SW pin has high-frequency switch signal. Pay attention to the isolation from other components on the board.

OVREG Semiconductor (xi'an) Co.,Ltd.

Typical Performance Characteristics

1. Efficiency

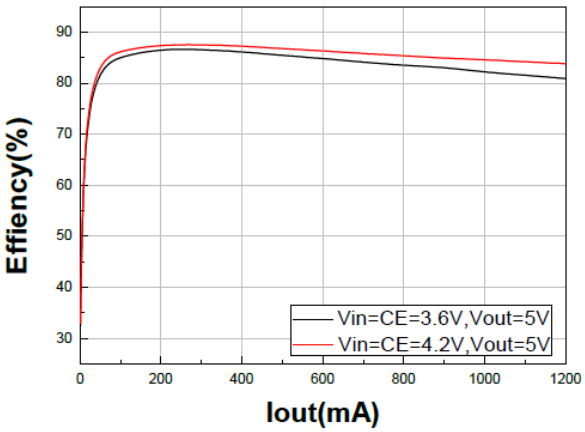

2. IQ VS Temperature

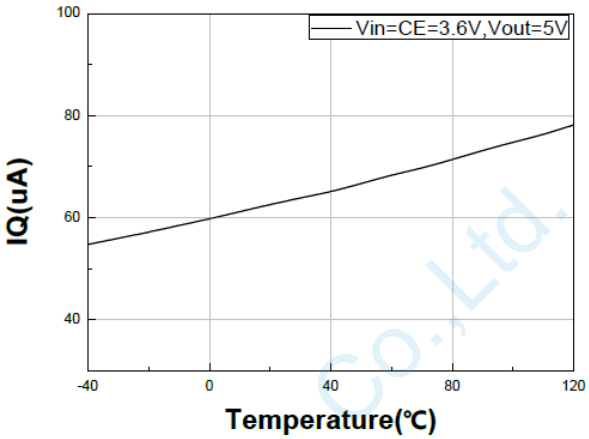

3. Vout Temperature

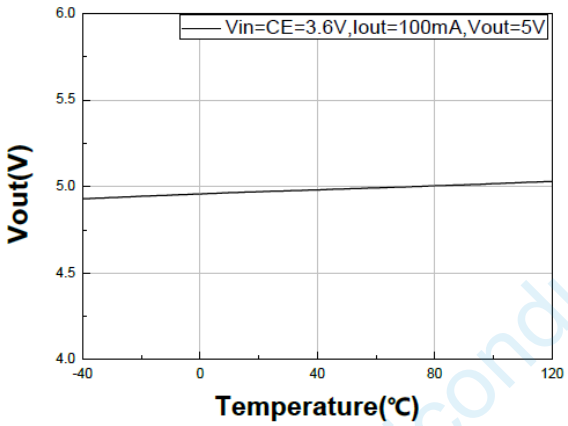

4. Oscillation frequency

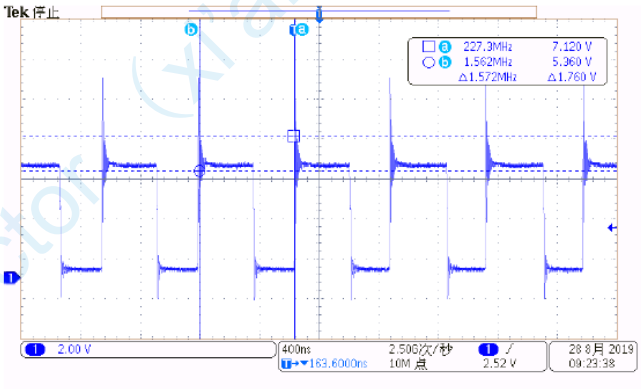

5. Maximum duty cycle of oscillation waveform

Vin=CE=3.6V Iload=1.2A Vout=5V

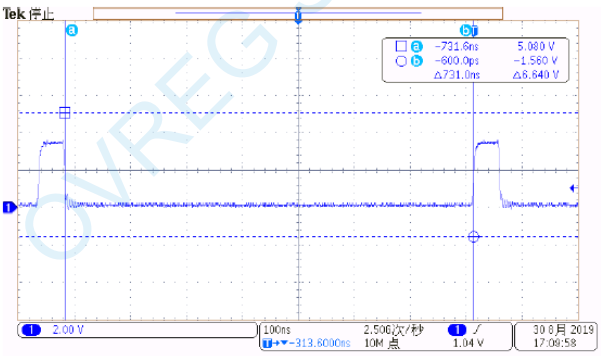

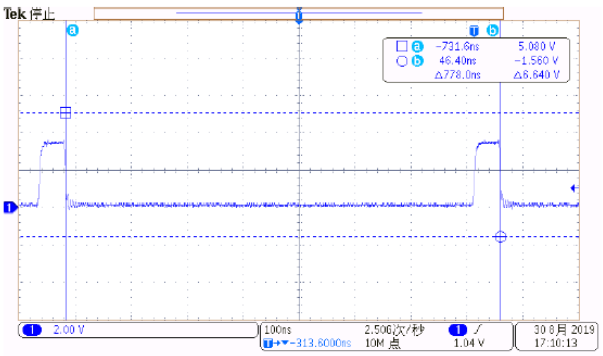

OVREG Semiconductor (xi'an) Co.,Ltd.

6. Output Voltage Ripple

（1） Vin=CE=3.6V ， Iout=0mA

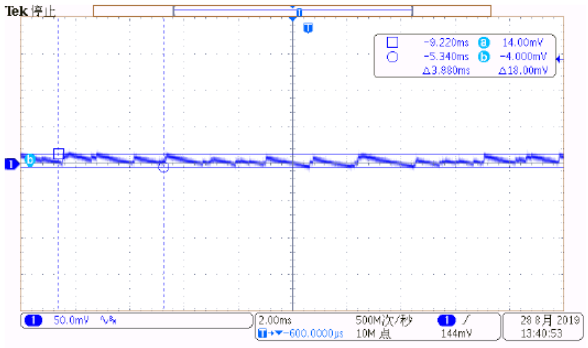

（2） Vin=CE=3.6V ， Iout=10mA

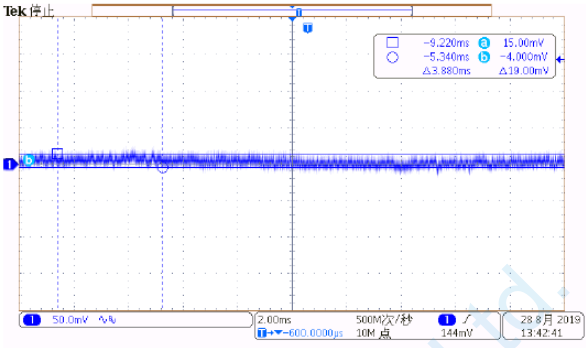

（3） Vin=CE=3.6V ， Iout=600mA

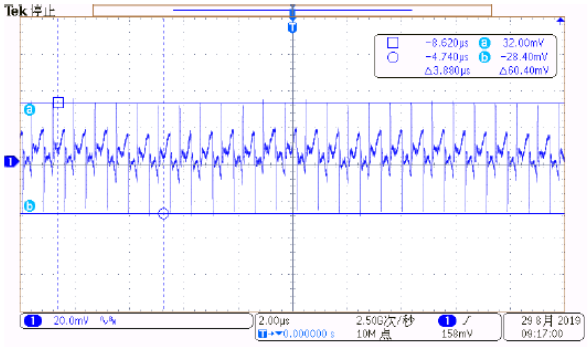

（4） Vin=CE=3.6V ， Iout=1200mA

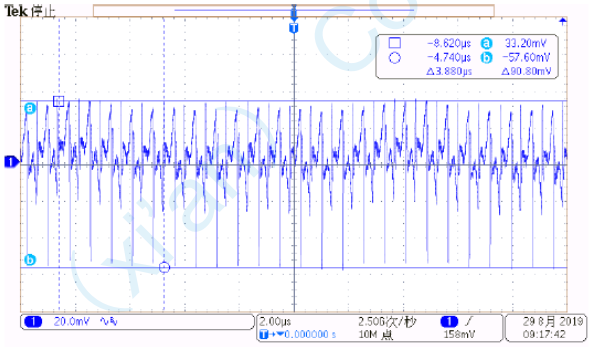

7. CE on waveform Vin=3.6V， CE=3.6V

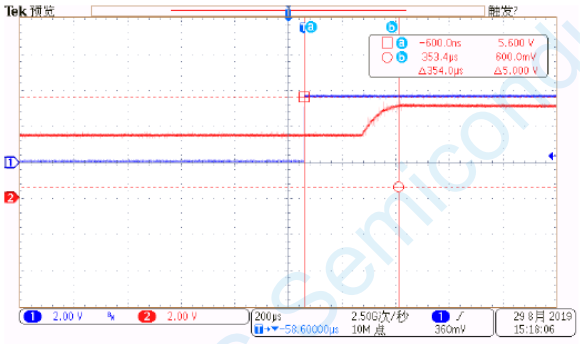

8. CE off waveform Vin=3.6V， CE=3.6V

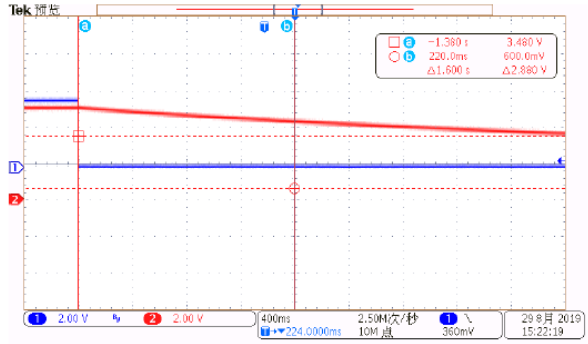

9. Load transient response

（1）Vin=CE=3.6V，Iload=300-900-300mA

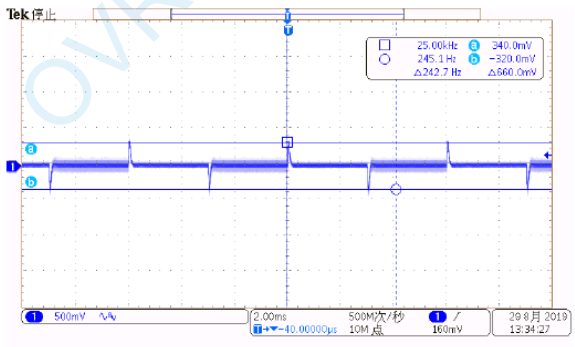

（2）Vin=CE=3.6V，Iload=600-1200-600mA

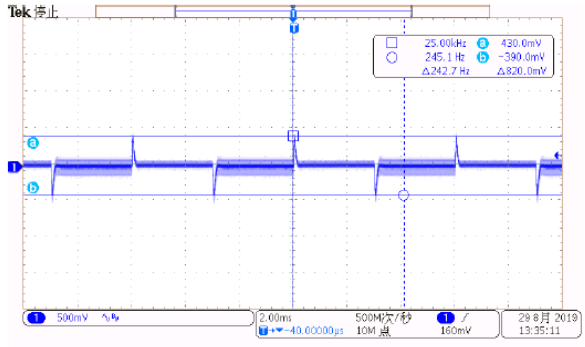

OVREG Semiconductor (Xi'an) Co.,Ltd.

Package Information

SOT23-6

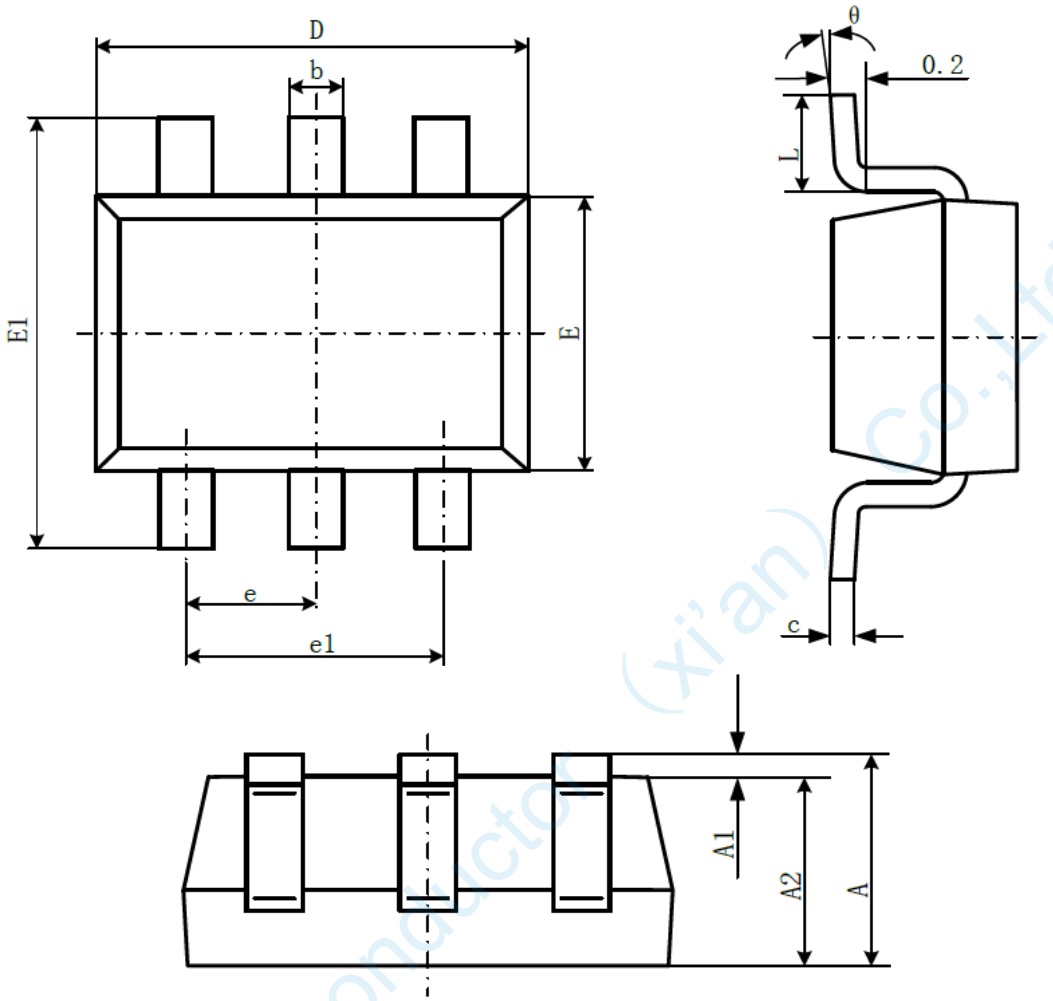

Symbol	Dimensions In Millimeters		Dimensions In Inches	
	Min	Max	Min	Max
Z	1.050	1.250	0.041	0.049
A1	0.000	0.100	0.000	0.004
A2	1.050	1.150	0.041	0.045
b	0.300	0.500	0.012	0.020
c	0.100	0.200	0.004	0.008
D	2.820	3.020	0.111	0.119
E	1.500	1.700	0.059	0.067
E1	2.650	2.950	0.104	0.116
e	0.950(BSC)		0.037(BSC)	
e1	1.800	2.000	0.071	0.079
L	0.300	0.600	0.012	0.024
θ	0°	8°	0°	8°

OVREG Semiconductor (xi'an) Co.,Ltd.