5V / 2.5A High-Efficiency Synchronous Buck Converter

The OV2604SR, a high-frequency integrated synchronous buck converter, provides a high-efficiency and compact-footprint power management solution.

The device can start up from an input voltage as low as 2.7V and deliver up to 2.5A continuous, 3A peak output current. When the output is shorted, the OV2604SR enters a hiccup protection mode and automatically recovers when the output short is removed.

Features

- Input Voltage Range: 2.7V to 5.5V
- Output Voltage Range: 0.6V to Vin
- Integrated Power MOSFETs
- Up to 2.5A output current, 3A Peak Output Current
- 1.0MHz Switching Frequency
- Auto-Skip Power Saving Operation
- Low Shutdown Current
- Internal Soft Start
- Quick Output Discharge at Power Down
- Power Good Indicator
- Cycle-by-Cycle Current Limit
- Short-Circuit Hiccup Protection
- Thermal Shutdown Protection
- SOT23-6 Package
- This is a Pb−Free Device

Applications

- Point of Load
- Hard Disk Drive and SSD
- Battery and USB Powered Device
- Set-Top Box
- LCD Monitor and TV
- Telecom and Networking
- Server and Storage System
- Computing Application

Pinout (Top View)

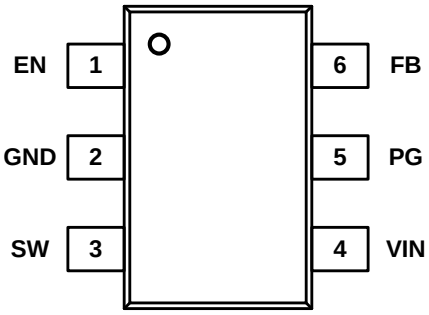

SOT23-6

Typical Application Circuit

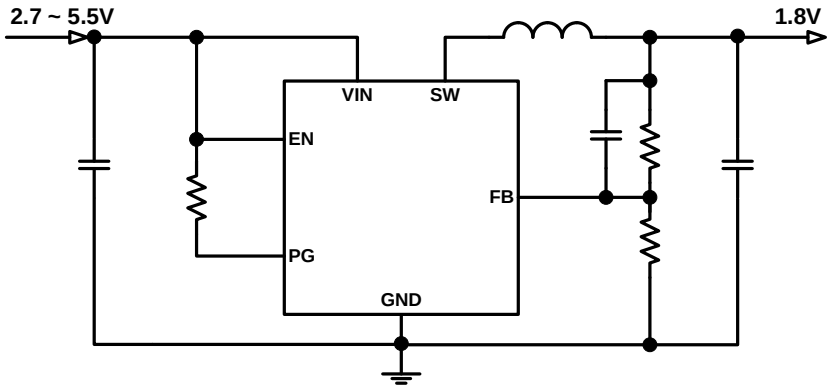

OVREG Semiconductor (xi'an) Co.,Ltd.

Pin Functions

Pin	Name	Description
1	EN	Enable pin of the chip.
2	GND	Ground. Directly connect this pin to the system ground planes.
3	SW	Switch Node. SW is connected to the internal high-side MOSFET and low-side MOSFET.
4	VIN	Input Supply. VIN must be locally bypassed by a 10uF or more ceramic capacitors.
5	PG	Power Good. Open-drain output. Provides a logic high valid power good output signal, indicating the regulator's output is in the regulation window.
6	FB	Feedback Input. Connecting a resistive divider from VOUT to this pin to adjust output voltage.

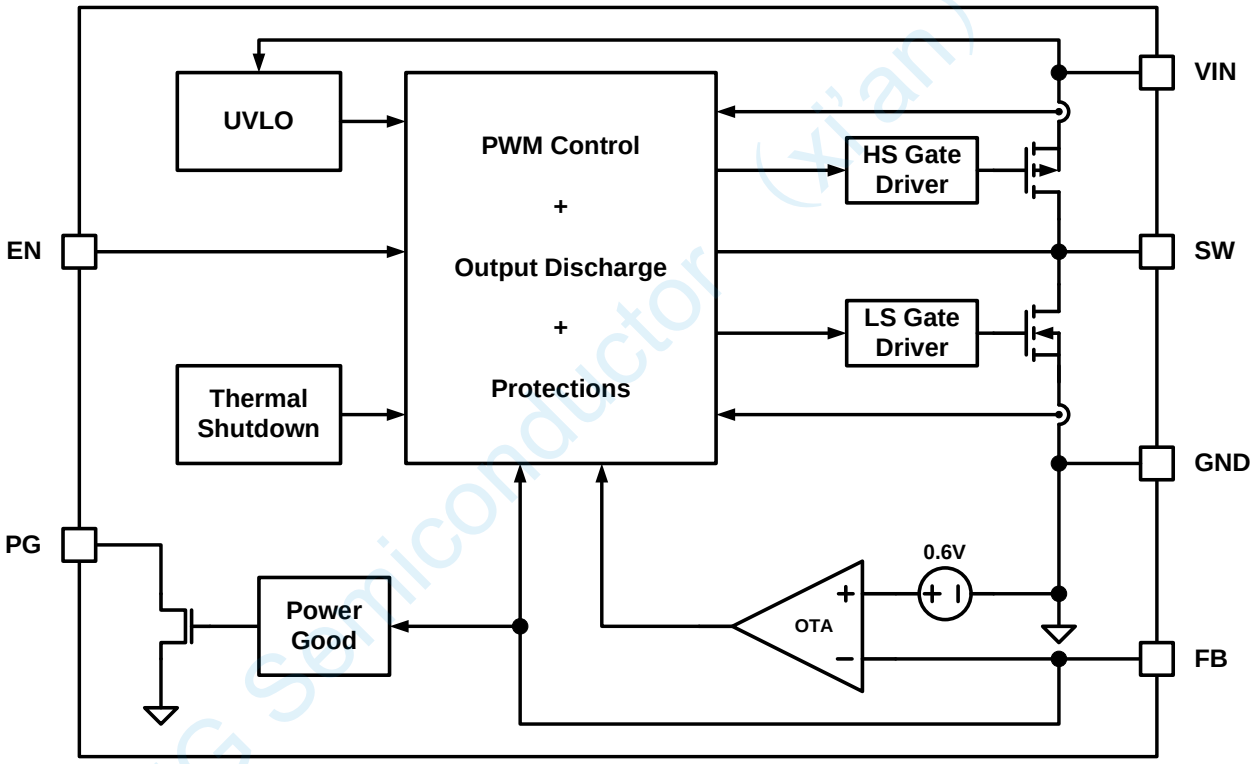

Figure 1. Functional Block Diagram

OVREG Semiconductor (xi'an) Co.,Ltd.

Absolute Maximum Rating(1) at T_A = 25 °C, unless otherwise specified

VIN	-0.3V to +6V
SW	-0.3V to +6V
All Other Pins	-0.3V to +6V or VIN+0.6V
Junction Temperature	150°C
Lead Temperature	260°C
Storage Temperature	-65°C to 150°C

Recommended Operating Conditions (3)

Supply Voltage V_{IN}	2.7V to 5.5V
Output Voltage V_{OUT}	0.6V to V_{IN}
Operating Junction Temperature	-40°C to +125°C

Notes:

1) Exceeding these ratings may damage the device.
2) The maximum allowable power dissipation is a function of the maximum junction temperature T_J (MAX), the junction-to-ambient thermal resistance θ_{JA}, and the ambient temperature T_A. The maximum allowable continuous power dissipation at any ambient temperature is calculated by P_D (MAX) = (T_J (MAX)-T_A)/θ_{JA}. Exceeding the maximum allowable power dissipation will cause excessive die temperature, and the regulator will go into thermal shutdown. Internal thermal shutdown circuitry protects the device from permanent damage.
3) The device is not guaranteed to function outside of its operating conditions.

OVREG Semiconductor (xi'an) Co.,Ltd.

Electrical Characteristics

V_{IN} = V_{EN} = 3.6V, typical values are tested at T_A = 25°C, unless otherwise noted.

Parameter	Symbol	Condition	Min	Typ	Max	Units
Operating Input Voltage	V_{IN}		2.7		5.5	V
Undervoltage Rising	V_{UVLO_R}	V_{IN} rising			2.65	V
Undervoltage Hysteresis	V_{UVLO_HYS}			150		mV
Supply Quiescent Current	I_{INQ}	V_{FB} = 0.7V		55	100	μA
Supply Shutdown Current	I_{INSD}	V_{EN} = 0V			1	μA
Switching Frequency	F_{SW}	CCM Operation	0.8	1.0	1.2	MHz
EN High Threshold	V_{EN_H}	V_{EN} rising	1.1			V
EN Low Threshold	V_{EN_L}	V_{EN} falling			0.4	V
FB Voltage	V_{FB}		0.591	0.6	0.609	V
High-Side MOSFET On-Resistance	R_{ON_H}	V_{IN} = 3.6V		110		mΩ
		V_{IN} = 5V (4)		104		
Low-Side MOSFET On-Resistance	R_{ON_L}	V_{IN} = 3.6V		105		mΩ
		V_{IN} = 5V (4)		100		
High-Side Peak Current Limit	I_{LIMT}		3.8			A
Minimum On Time (4)	T_{ON_MIN}			75		ns
Maximum Duty Ratio (4)	D_{MAX}		100			%
Soft Start Time (4)	T_{SS}			1.2		ms
Hiccup Idle Time (4)	T_{HIC}	V_{IN} = 5V		8		ms
Output Discharge Resistance (From SW to GND)	R_{DISCH}	V_{IN} = 5V, V_{SW} = 1.0V (4)		7		Ω
		V_{IN} = 5V, V_{SW} = 1.8V		9.5		
		V_{IN} = 3.3V, V_{SW} = 1.0V (4)		11		
		V_{IN} = 3.3V, V_{SW} = 1.8V		16		
PGOOD Window (4)		V_{FB} / 0.6V x 100%		85~115		%
PGOOD Hysteresis (4)				5		%
PGOOD Pull-Low Voltage	V_{PG_L}	10mA Sink Current			0.3	V
Thermal Shutdown (4)	T_{SD}			155		°C
Thermal Shutdown Hysteresis (4)	T_{SDhys}			20		°C

Notes:

4) Guaranteed by design, not production tested.

OVREG Semiconductor (xi'an) Co.,Ltd.

Typical Characteristics

V_{IN} = V_{EN} = 5V, V_{OUT} = 1.8V, T_A = 25°C, L = 2.2uH, C = 22uF * 2, unless otherwise noted.

Efficiency
(Vout = 3.3V)

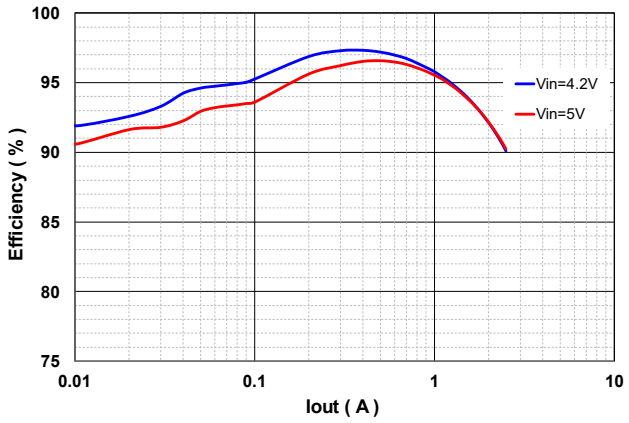

Efficiency
(Vout = 2.5V)

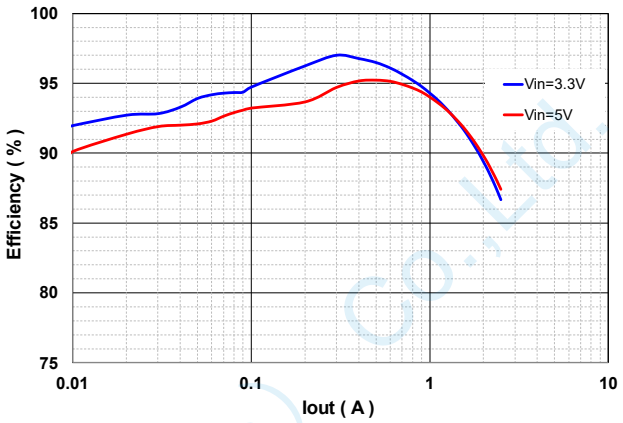

Efficiency
(Vout = 1.8V)

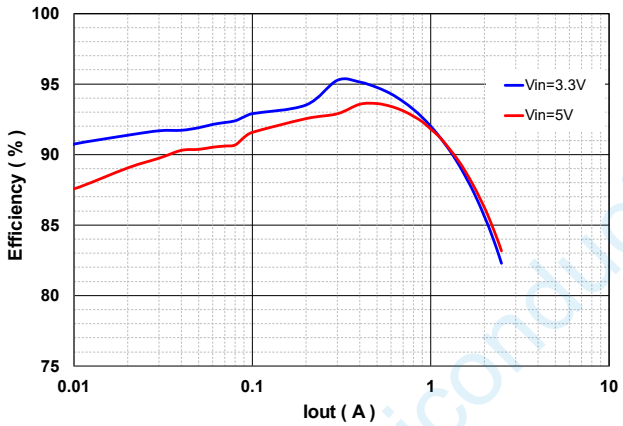

Efficiency
(Vout = 1.2V)

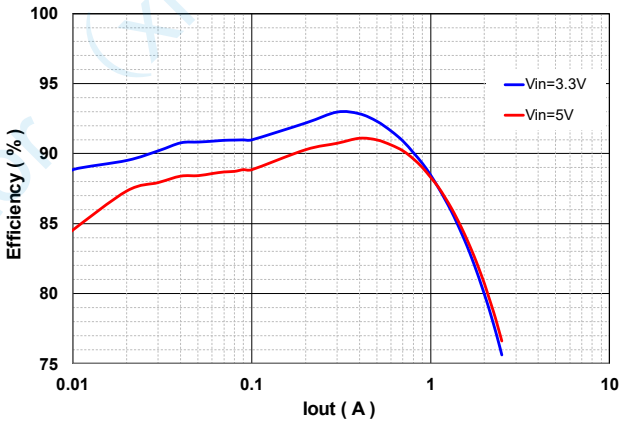

Efficiency
(Vout = 1.0V)

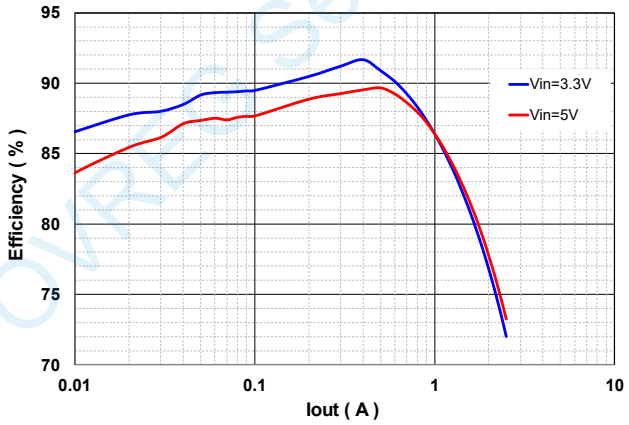

Output Regulation
(Vout = 1.8V)

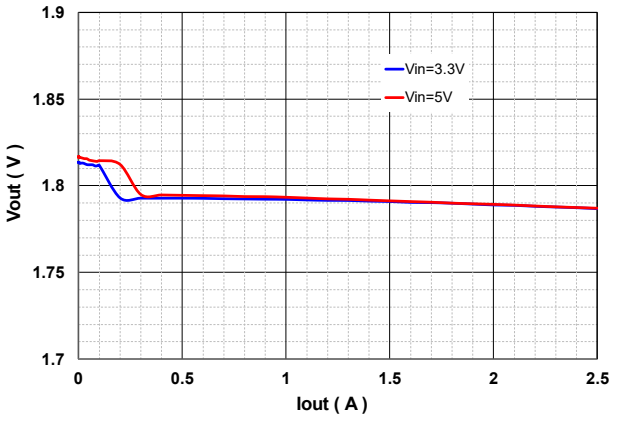

OVREG Semiconductor (xi'an) Co.,Ltd.

Typical Characteristics

VIN = VEN = 5V, VOUT = 1.8V, TA = 25°C, L = 2.2uH, C = 22uF * 2, unless otherwise noted.

Package Temperature Rise (on 4-Layer EVB)
(Vin = 5V)

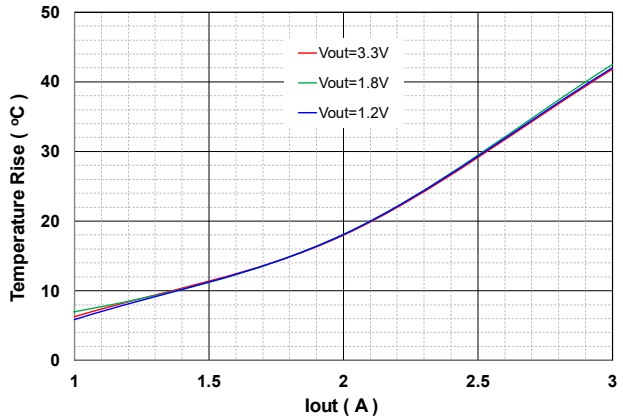

Package Temperature Rise (on 4-Layer EVB)
(Vin = 3.3V)

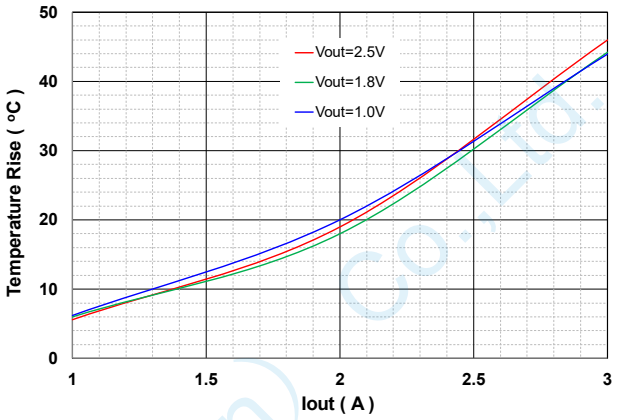

Power Up and Soft Start
(Vin = 5V, Vout = 1.8V, Iout = 0A)

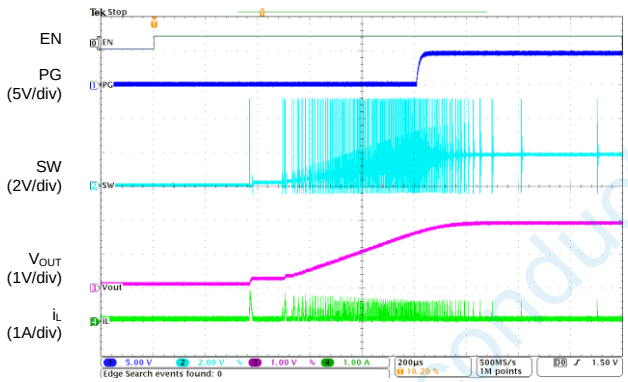

Time (200us/div)

Power Down and Quick Output Discharge
(Vin = 5V, Vout = 1.8V, Iout = 0A)

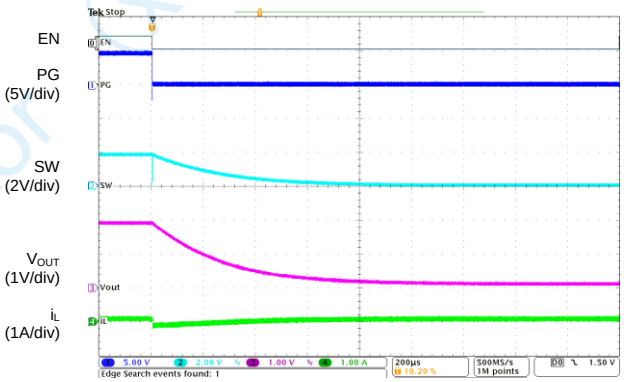

Time (200us/div)

Steady State
(Vin = 5V, Vout = 1.8V, Iout = 0.05A)

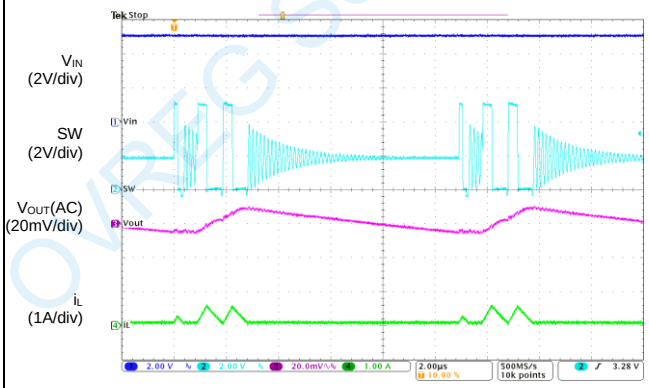

Time (2us/div)

Steady State
(Vin = 5V, Vout = 1.8V, Iout = 2A)

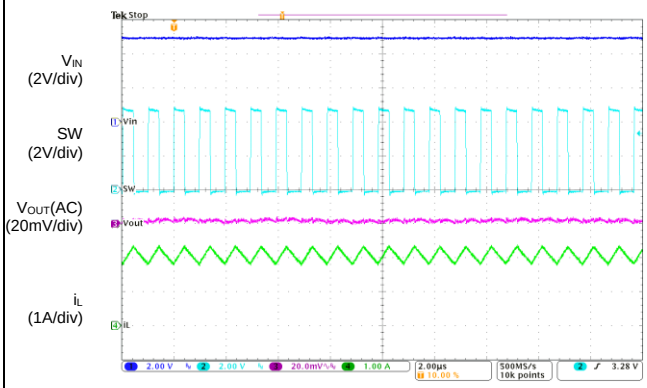

Time (2us/div)

OVREG Semiconductor (xi'an) Co.,Ltd.

Typical Characteristics

VIN = VEN = 5V, VOUT = 1.8V, TA = 25°C, L = 2.2uH, C = 22uF * 2, unless otherwise noted.

Load Transient
(Vin = 5V, Vout = 1.8V, Iout = 0.05A → 1A)

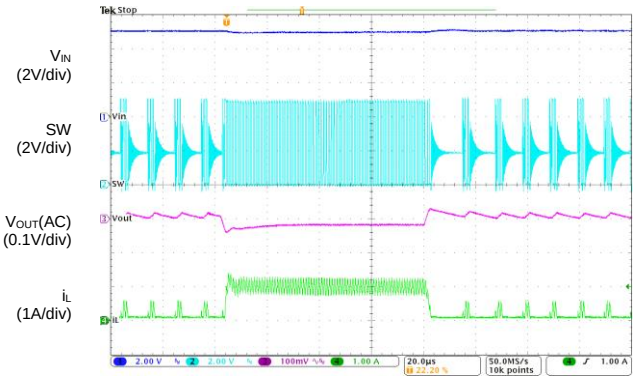

Time (20us/div)

Load Transient
(Vin = 5V, Vout = 1.8V, Iout = 0.05A → 2A)

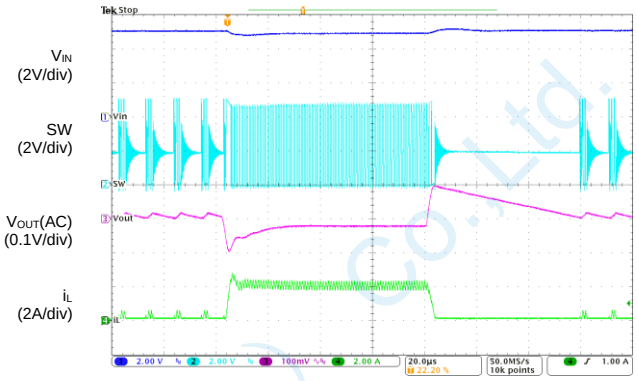

Time (20us/div)

Line Transient
(Vin = 2.7V → 5V, Vout = 1.8V, Iout = 1A)

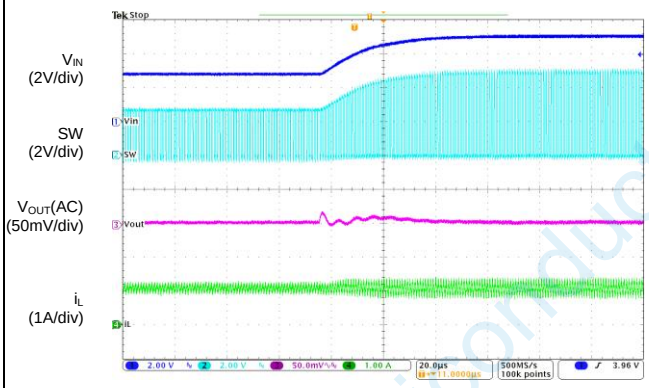

Time (20us/div)

Line Transient
(Vin = 5V → 2.7V, Vout = 1.8V, Iout = 1A)

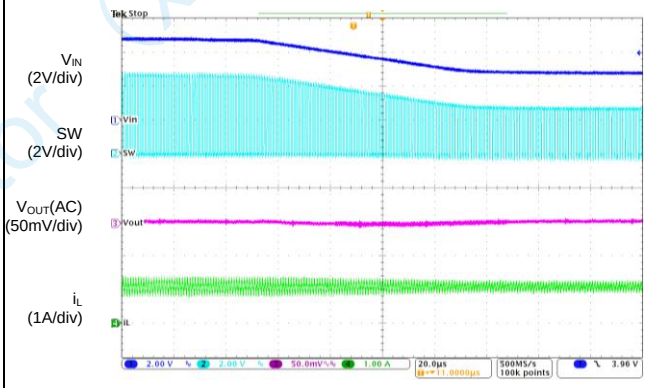

Time (20us/div)

Short Circuit Protection
(Vin = 5V, Vout = 1.8V, Iout = 1A → ShortCircuit)

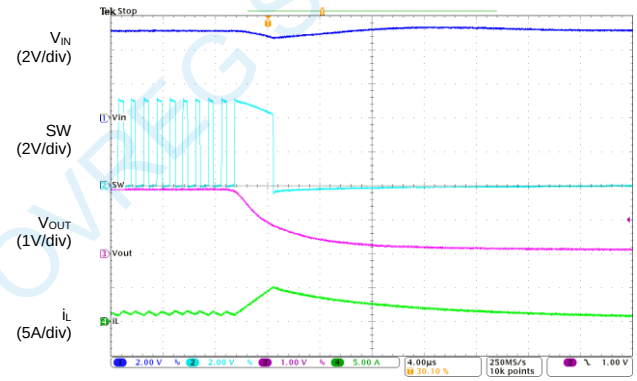

Time (4us/div)

Hiccup Operation
(Vin = 5V, Vout = 1.8V, Iout = ShortCircuit)

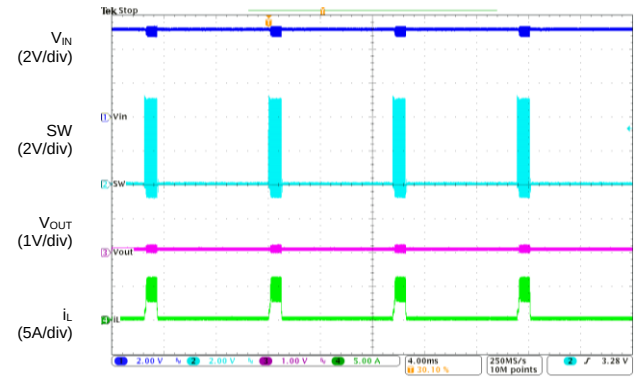

Time (4ms/div)

OVREG Semiconductor (xi'an) Co.,Ltd.

Operation Information

The OV2604SR, a high-frequency integrated synchronous buck converter, provides a high-efficiency and compact-footprint power management solution.

The device can start up from an input voltage as low as 2.7V and deliver up to 2.5A output current. When the output is shorted, the OV2604SR enters a hiccup protection mode and automatically recovers when the output short is removed.

Undervoltage Lockout

The input voltage VIN must reach or exceed 2.65V before the OV2604SR enables the converter output to begin a startup sequence. The UVLO threshold hysteresis is 150mV typically.

Enable and Quick Output Discharge

The OV2604SR is enabled when EN pin is set high (>1.1V), and it begins switching operation with a soft start. Once EN pin is pulled low (<0.4V), switching is stopped, and an internal resistor from SW to GND discharges the output voltage rapidly.

Note that EN pin should not be left float.

Soft Start

A soft start is employed to limit inrush current at startup. After a typical 500us delay time since EN is pulled high, the output voltage begins to ramp up and eventually reaches a target output voltage in about 1ms. The OV2604SR is able to start up from a pre-biased output condition.

PWM Operation

In medium and heavy load range, the device operates in a Continuous Conduction Mode (CCM) with a fixed switching frequency, 1.0MHz typical. In this mode, the output voltage is regulated by Pulse Width Modulation (PWM) of an internal high-side P-MOSFET while an internal low-side N-MOSFET operates complementarily as a synchronous rectifier.

In light load range, the device automatically operates in a Discontinuous Conduction Mode (DCM) and skips pulses to save power.

Power Good

The device monitors the output voltage and provides a power good output signal at an open- drain PG pin.

The power good signal is low when EN is high while the output voltage has not been established. After the output voltage is within a regulation window, which is typically between 85% and 115% of a target regulation level, the PG pin will be pulled high by an external pull-up resistor, 100k for instance. Once the output voltage is below 80% or over 120% of the target regulation level during operation, the PG pin will be internally pulled low by the device.

Over Current Protection

The OV2604SR protects the converter from over current with a cycle-by-cycle peak current limitation, 3.8A minimum. Once the inductor current exceeds the current limit threshold, the high-side P-MOSFET is turned off if the pulse width is greater than a minimum on time, 75ns typical, and then the low-side N-MOSFET is turned on to prevent current runaway.

Short-Circuit Protection and Hiccup

To reduce power consumption and device temperature rise in case that a hard short circuit happens at the output, a short-circuit protection scheme is implemented in the OV2604SR. After the soft start time expires, if FB voltage is still below 50mV, the device stops switching and enters a hiccup operation with an 8ms idle time. Normal operation can be automatically recovered after the short-circuit condition goes away.

Thermal Shutdown

The OV2604SR has a built-in temperature monitor to prevent thermal runaway. In case the die temperature exceeds a threshold, 155℃ typical, the device turns off both high-side P-MOSFET and low-side N-MOSFET, then shuts down. After the die temperature drops below 135℃ typical, the converter automatically resumes normal operation starting from a soft start.

OVREG Semiconductor (xi'an) Co.,Ltd.

Application Information

Following information provides a general component design reference in a typical application of the OV2604SR.

Output Voltage Setting

Output voltage VOUT is programmed by a resistor divider connected between VOUT sense point and analog ground AGND, as depicted in Figure 2, having a value of

$$V_{OUT} = V_{FB} \cdot \left(1 + \frac{R1}{R2}\right) \quad (1)$$

Where VFB is feedback voltage, which equals to an internal reference voltage 0.6V when the VOUT is in regulation.

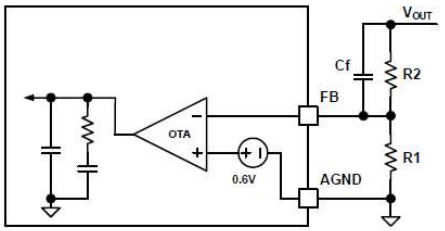

In general, the resistor R1 is predetermined in an application, having a typical value of 100k . After R1 is selected, R2 value is given by

$$R2 = \left(\frac{V_{OUT}}{V_{FB}} - 1\right) \cdot R1 \quad (2)$$

When there is a need, users may fine tune close-loop response by adding a small feedback capacitor Cf, having a typical value of 22pF

Inductor Selection

A low-DCR SMD inductor is recommended for a high-efficiency and compact design. A rule of thumb is to allow the peak-to-peak ripple current to be approximately 30-50% of the maximum output current, and the maximum peak inductor current in normal operation should not be over 75% of the current limit to maintain a stable output regulation.

In most applications, a 2.2uH inductor could be a good choice though users may have alternatives in a range from 0.47uH to 4.7uH. Given an inductance L, the peak-to-peak ripple current in CCM is

$$I_{pp} = \frac{V_{OUT} \cdot \left(1 - \frac{V_{OUT}}{V_{IN}}\right)}{F_S \cdot L} \quad (3)$$

Where FS is switching frequency in CCM.

Due to the cycle-by-cycle peak current protection, having a built-in peak current limit of ILIMT, the output DC current limit IOUT_MAX is also a function of the peak-to-peak ripple current Ipp.

$$I_{OUT_MAX} = I_{LIMT} - \frac{I_{pp}}{2} \quad (4)$$

Rated saturation current of the selected inductor should be higher than ILIMT, and rated DC current should be higher than IOUT_MAX based on a temperature rise concern.

Input Capacitor Selection

A 10uF or more ceramic capacitors, placed as closely to the OV2604SR as possible, are employed to stabilize the input voltage, absorb hot-plug voltage spikes, and bypass switching pulse current with a low power loss. Usually, the lower input voltage and the higher output power, the more input capacitors are needed.

Output Capacitor Selection

A 22uF or more Low-ESR capacitors, such as X5R or better ceramic capacitors, are preferred to have lower output voltage ripple and transient spikes. For ceramic capacitors, the

$$V_{pp} = \frac{I_{pp}}{8 \cdot F_S \cdot C_{OUT}} \quad (5)$$

where COUT is a total output capacitance value of all the capacitors in parallel. Bias voltage de-rating should be considered as well.

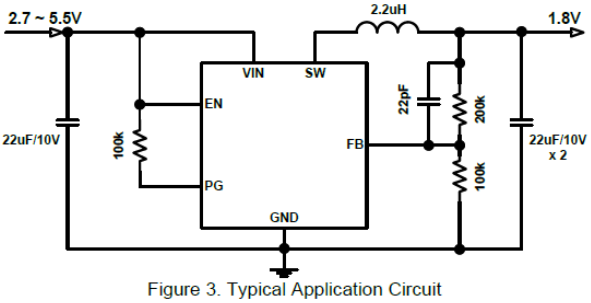

Figure 3. Typical Application Circuit

Package Information

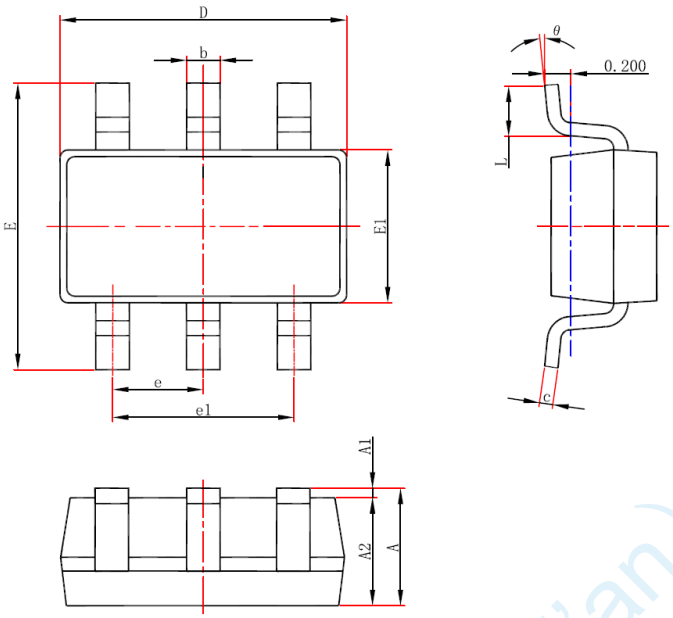

Symbol	Dimensions In Millimeters		Dimensions In Inches	
	Min.	Max.	Min.	Max.
A	1.050	1.250	0.041	0.049
A1	0.000	0.100	0.000	0.004
A2	1.050	1.150	0.041	0.045
b	0.300	0.500	0.012	0.020
c	0.100	0.200	0.004	0.008
D	2.820	3.020	0.111	0.119
E1	1.500	1.700	0.059	0.067
E	2.650	2.950	0.104	0.116
e	0.950(BSC)		0.037(BSC)	
e1	1.800	2.000	0.071	0.079
L	0.300	0.600	0.012	0.024
θ	0°	8°	0°	8°

Ordering Information

Part number	Material	Type	Reel size	MOQ	MOQ/internal box	MOQ/carton
OV2604SR	GREEN	T/R	7 inch	3k/reel	10reel= 30k/box	4boxes=120k/carton

OVREG Semiconductor (xi'an) Co.,Ltd.