4 Channel 5.5V 2A DC/DC Step-Down PMU

The OV21674PU is a 4-channels Highly integrated power management IC designed to minimize power consumption in consumer and multimedia applications. the OV21674PU integrates 4-ch synchronous buck converter. The converters are optimized for high efficiency (greater than 92%) and feature integrated low impedance FETs. The internal compensation architecture simplifies the application circuit design. Besides, the independent enable control makes the designer have the greatest flexibility to optimize timing for power sequencing purposes. The OV21674PU is available in a 24 pin QFN4x4 package.

FEATURES

- 2.7V to 5.5V Input Voltage Range
- Output Voltage as Low as 0.6V
- Continuous Load Current of each Channel: 2A
- 100% Duty Cycle in Dropout Operation
- Input Voltage UVP&OVP
- Internal Soft-Start
- Over-Current Protection and Hiccup
- Internal Compensation
- 24-pin 4mm x 4mm QFN Package

APPLICATIONS

- IP Camera
- Video Door Bell

TYPICAL APPILCATION

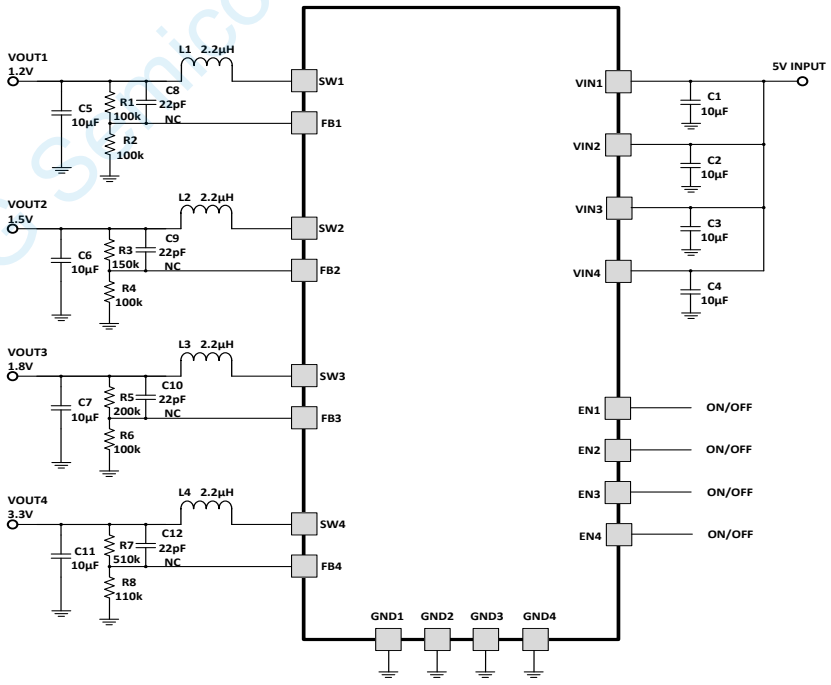

Figure 1. Basic Application Circuit

OVREG Semiconductor (xi'an) Co.,Ltd.

ABSOLUTE MAXIMUM RATINGS (Note 1)

Parameter	Value	Unit
Input Supply Voltage	-0.3~6.3	V
All SW Voltages	-0.3~6.5	V
All EN, FB Voltage	-0.3~6.5	V
Peak Current limit	2.5	A
Operating Ambient Temperature	-40~+85	°C
Junction Temperature (Note2)	155	°C
Power Dissipation	2.5	W
Lead Temperature (Soldering,10s)	260	°C

Note : 4CH total output power consumption must be less than 10W

PIN CONFIGURATION

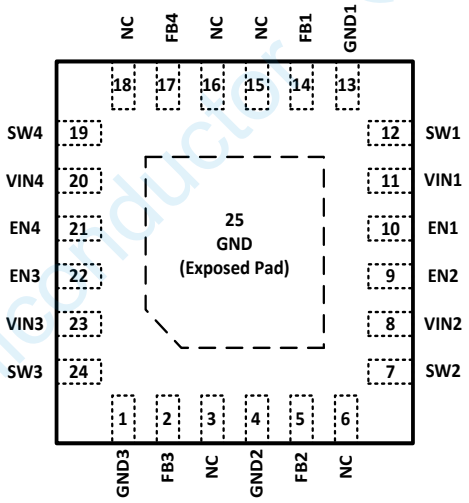

QFN4x4-24L (Top View)

Top Mark: T7004/YYXXX (T7004: Device Code, YYXXX: Inside Code)

OVREG Semiconductor (xi'an) Co.,Ltd.

PIN FUNCTIONS

Pin	Name	Function
1	GND3	GroundpinofCH3.
2	FB3	Feedback input of CH3. Connect to output voltage with a resistor divider
3	NC	Not connected.
4	GND2	Ground pin of CH2.
5	FB2	Feedback input of CH2. Connect to output voltage with a resistor divider
6	NC	Not connected.
7	SW2	Internal MOSFET switching output of CH2. Connect SW2 pin with a low pass filter circuit to obtain a stable DC output voltage.
8	VIN2	Power input pin of CH2. Recommended to use a 10μF MLCC capacitor between VIN2 pin and GND2 pin.
9	EN2	CH2 turn on/turns off control input. Don't leave this pin floating
10	EN1	CH1 turn on/turns off control input. Don't leave this pin floating
11	VIN1	Power input pin of CH1. Recommended to use a 10μF MLCC capacitor between VIN1 pin and GND1 pin.
12	SW1	Internal MOSFET switching output of CH1.Connect SW1 pin with a low pass filter circuit to obtain a stable DC output voltage.
13	GND1	Power ground pin of CH1.
14	FB1	Feedback input of CH1. Connect to output voltage with a resistor divider
15	NC	Not connected.
16	NC	Not connected.
17	FB4	Feedback input of CH4. Connect to output voltage with a resistor divider
18	NC	Not connected.
19	SW4	Internal MOSFET switching output of CH4. Connect SW4 pin with a low pass filter circuit to obtain a stable DC output voltage.
20	VIN4	Power input pin of CH4. Recommended to use a 10μF MLCC capacitor between VIN4 pin and GND4 pin.
21	EN4	CH4 turn on/turns off control input. Don't leave this pin floating
22	EN3	CH3 turn on/turns off control input. Don't leave this pin floating
23	VIN3	Power input pin of CH3. Recommended to use a 10μF MLCC capacitor between VIN3 pin and GND3 pin.
24	SW3	Internal MOSFET switching output of CH3. Connect SW3 pin with a low pass filter circuit to obtain a stable DC output voltage..
25	GND(EP)	Ground pin of CH4.

OVREG Semiconductor (xi'an) Co.,Ltd.

ESD RATING

Items	Description	Value	Unit
V_{ESD}	Human Body Model for all pins	±2000	V

JEDEC specification JS-001

RECOMMENDED OPERATING CONDITIONS

Items	Description	Min	Max	Unit
Voltage Range	IN	2.7	5.5	V
T_J	Operating Junction Temperature Range	-40	125	°C

THERMAL RESISITANCE (Note 3)

Items	Description	Value	Unit
θ_{JA}	Junction-to-ambient thermal resistance	70	°C/W

OVREG Semiconductor （xi'an） Co.,Ltd.

ELECTRICAL CHARACTERISTICS (V_{IN}=5V, V_{OUT}=1.8V, T_A = 25°C, unless otherwise noted.)

Parameter	Test Conditions	Min	Typ	Max	Unit
Input Voltage Range		2.7		5.5	V
Buck Regulator 1, 2, 3, 4					
OVP Threshold			6.5		V
UVLO Threshold		1.7	1.9	2.1	V
Input DC Supply Current					
PWM Mode	V_{OUT} = 90%, I_{LOAD}=0mA		150	300	μA
PFM Mode	V_{OUT} = 105%, I_{LOAD}=0mA		40	75	μA
Shutdown Mode	V_{EN}= 0V, V_{IN}=4.2V		0.1	1.0	μA
Regulated Feedback Voltage V_{FB}	T_A= 25°C, PWM Operation	0.588	0.600	0.612	V
Oscillation Frequency	V_{OUT}=100%		1.0		MHz
	V_{OUT}=0V		300		kHz
On Resistance of PMOS	I_{SW}=100mA		150		mΩ
On Resistance of NMOS	I_{SW}=-100mA		70		mΩ
Peak Current Limit	V_{IN}= 5V, V_{OUT}=90%		2.5		A
EN Input High Voltage		1.5			V
EN Input Low Voltage				0.3	V
EN Leakage Current			±0.01	±1.0	μA
SW Leakage Current	V_{EN}=0V, V_{IN}=V_{SW}=5V		±0.01	±1.0	μA
Thermal Shutdown			160		°C
Thermal Hysteresis			20		°C

Note 1: Absolute Maximum Ratings are those values beyond which the life of a device may be impaired.

Note 2: T_J is calculated from the ambient temperature T_A and power dissipation P_D according to the following formula: $T_J = T_A + (P_D) \times \theta_{JA}$.

Note 3: Measured on JESD51-7, 4-layer PCB.

Note 4: Thermal shutdown threshold and hysteresis are guaranteed by design.

OVREG Semiconductor (xi'an) Co.,Ltd.

GENERAL DESCRIPTION

Feature Description

OV21674PU is a highly efficient and integrated Power Management IC for Systems-on-a-Chip (SoCs), ASICs, and processors. The device incorporates 4 high-efficiency synchronous buck regulators.

Each of the buck regulators is specially designed for high-efficiency operation throughout the load range. With 1MHz typical switching frequency, the external L- C filter can be small and still provide very low output voltage ripple. The bucks are internally compensated to be stable with the recommended external inductors and capacitors as detailed in the application diagram. Synchronous rectification yields high efficiency for low voltage and high output currents.

Additional features include soft-start, under-voltage lockout, bypass, and current and thermal overload protection.

4 channel BUCKs are nearly identical in performance and mode of operation. They can operate in automatic mode (PWM/PFM). At very light loads, BUCKs enter PFM mode and operate with reduced switching frequency and supply current to maintain high efficiency.

Soft-Start

Each of BUCKs has an internal soft-start circuit that limits the in-rush current during startup. This allows the converters to gradually reach the steady-state operating point, thus reducing startup stresses and surges. During startup, the switch current limit is increased in steps. The startup time depends on the output capacitor size, load current and output voltage.

Current Limiting

A current limit feature protects the device and any external components during overload conditions. In PWM mode the current limiting is implemented by using an internal comparator that trips at current levels according to the buck capability. If the output is shorted to ground the device enters a timed current limit mode where the NFET is turned on for a longer duration until the inductor current falls below a low threshold, ensuring inductor current has more time to decay, thereby preventing runaway.

Uder Voltage Lock Out (UVLO)

The VIN voltage is monitored for a supply under voltage condition, for which the operation of the device cannot be guaranteed. The part will automatically disable PMIC. To prevent unstable operation, the UVLO has a hysteresis window. An under voltage lockout (UVLO) will disable BUCKs outputs, Once the supply voltage is above the UVLO hysteresis, the device will initiate a power-up sequence and then enter the active state.

Over Voltage Lack Out(OVLO)

The VIN voltage is monitored for a supply over voltage condition, for which the operation of the device cannot be guaranteed. The purpose of OVLO is to protect the part and all other components connected to the PMIC outputs from any damage and malfunction. Once VIN rises over about 6.5V, BUCKs will be disabled automatically. To prevent unstable operation, the OVLO has a hysteresis window. An over voltage lockout

OVREG Semiconductor (xi'an) Co.,Ltd.

(OVLO) will force the device into the reset state, Once the supply voltage goes below the OVLO lower threshold, the device will initiate a power-up sequence and then enter the active state.

Thermal Shutdown (OTP)

The temperature of the silicon die is monitored for an over-temperature condition, for which the operation of the device cannot be guaranteed. The part will automatically be disabled if the temperature is too high. The thermal shutdown (OTP) will force the device into the reset state. In reset, all circuitry is disabled. To prevent unstable operation, the OTP has a hysteresis window of about 20°C. Once the temperature has decreased below the OTP hysteresis, the device will initiate a power-up sequence and then enter the active state. In the active state, the part will start up as if for the first time.

DETAILED DESIGN PROCEDURE

External Components Selection

OV21674PU require an input capacitor, an output capacitor and an inductor. These components are critical to the performance of the device. OV21674PU are internally compensated and do not require external components to achieve stable operation. The output voltage can be programmed by resistor divider.

$$V_{OUT} = V_{FEEDBACK} * \frac{R1+R2}{R2}$$

Select R1 value around 50kΩ

$$R2 = R1 * \frac{V_{FEEDBACK}}{V_{OUT} - V_{FEEDBACK}}$$

Where VFEEDBACK as 0.6V

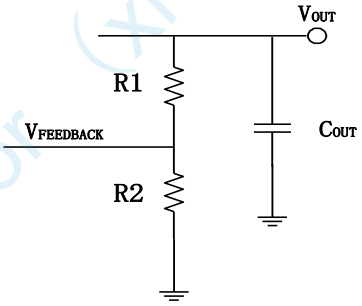

Output Inductors and Capacitors Selection

There are several design considerations related to the selection of output inductors and capacitors:

- Load transient response
- Stability
- Efficiency
- Output ripple voltage
- Over current ruggedness

The device has been optimized for use with nominal LC values as shown in the Application Diagram.

BUCK Power Supply Recommendations

OV21674PU are designed to operate from input voltage supply range between 2.3 V and 6 V. This input supply must be well regulated. If the input supply is located more than a few inches, additional bulk capacitance may be required in addition to the ceramic bypass capacitors. An ceramic capacitor with a value of 10 μ F is a typical choice.

VIN must be connected to input capacitors as close as possible.

OVREG Semiconductor (xi'an) Co.,Ltd.

BUCK Inductor Selection

The recommended inductor values are shown in the Application Diagram. It is important to guarantee the inductor core does not saturate during any foreseeable operational situation. The inductor should be rated to handle the peak load current plus the ripple current: Care should be taken when reviewing the different saturation current ratings that are specified by different manufacturers. Saturation current ratings are typically specified at 25°C, so ratings at maximum ambient temperature of the application should be requested from the manufacturer.

$$I_{L(MAX)} = I_{LOAD(MAX)} + I_{RIPPLE} = I_{LOAD(MAX)} + \frac{D * (V_{IN} - V_{OUT})}{2 * L * F_S}$$

$$D = \frac{V_{OUT}}{V_{IN}}, F_S = 1MHz, L = 2.2uH$$

where

•IL(MAX): Max inductor Current

•ILOAD(MAX): Max load current

•IRIPPLE: Peak-to-Peak inductor current

•D: Estimated duty factor

•VIN: Input voltage

•VOUT: Output voltage

•FS: Switching frequency, Hertz

Recommended Method for BUCK Inductor Selection

The best way to guarantee the inductor does not saturate is to choose an inductor that has saturation current rating greater than the maximum device current limit, as specified in the Electrical Characteristics. In this case the device will prevent inductor saturation by going into current limit before the saturation level is reached.

Alternate Method for BUCK Inductor Selection

If the recommended approach cannot be used care must be taken to guarantee that the saturation current is greater than the peak inductor current:

$$I_{SAT} > IL_{PEAK}$$

$$I_{LPEAK} = I_{OUTMAX} + \frac{I_{RIPPLE}}{2}$$

$$I_{RIPPLE} = \frac{D * (V_{IN} - V_{OUT})}{L * F_S}$$

$$D = \frac{V_{OUT}}{V_{IN} * EFF}$$

where

•ISAT: Inductor saturation current at operating temperature

•ILPEAK: Peak inductor current during worst case conditions

•IOUTMAX: Maximum average inductor current

•IRIPPLE: Peak-to-Peak inductor current

•VOUT: Output voltage

OVREG Semiconductor (xi'an) Co.,Ltd.

- VIN: Input voltage
- L: Inductor value in Henries at IOUTMAX
- FS: Switching frequency, Hertz
- D: Estimated duty factor
- EFF: Estimated power supply efficiency

ISAT may not be exceeded during any operation, including transients, startup, high temperature, worst case conditions, etc.

Output and Input Capacitors Characteristics

Special attention should be paid when selecting these components. The DC bias of these capacitors can result in a capacitance value that falls below the minimum value given in the recommended capacitor specifications table.

The ceramic capacitor's actual capacitance can vary with temperature. The capacitor type X7R, which operates over a temperature range of −55°C to +125°C, will only vary the capacitance to within ±15%. The capacitor type X5R has a similar tolerance over a reduced temperature range of −55°C to +85°C. Many large value ceramic capacitors, larger than 1µF are manufactured with Z5U or Y5V temperature characteristics. Their capacitance can drop by more than 50% as the temperature varies from 25°C to 85°C. Therefore X5R or X7R is recommended over Z5U and Y5V in applications where the ambient temperature will change significantly above or below 25°C.

Tantalum capacitors are less desirable than ceramic for use as output capacitors because they are more expensive when comparing equivalent capacitance and voltage ratings in the 0.47µF to 44µF range. Another important consideration is that tantalum capacitors have higher ESR values than equivalent size ceramics. This means that while it may be possible to find a tantalum capacitor with an ESR value within the stable range, it would have to be larger in capacitance (which means bigger and more costly) than a ceramic capacitor with the same ESR value. It should also be noted that the ESR of a typical tantalum will increase about 2:1 as the temperature goes from 25°C down to −40°C, so some guard band must be allowed.

BUCK Output Capacitor Selection

The output capacitor of a switching converter absorbs the AC ripple current from the inductor and provides the initial response to a load transient. The ripple voltage at the output of the converter is the product of the ripple current flowing through the output capacitor and the impedance of the capacitor. The impedance of the capacitor can be dominated by capacitive, resistive, or inductive elements within the capacitor, depending on the frequency of the ripple current. Ceramic capacitors have very low ESR and remain capacitive up to high frequencies. Their inductive component can be usually neglected at the frequency ranges the switcher operates.

The output-filter capacitor smooths out the current flow from the inductor to the load and helps maintain a steady output voltage during transient load changes. It also reduces output voltage ripple. These capacitors must be selected with sufficient capacitance and low enough ESR to perform these functions.

Note that the output voltage ripple increases with the inductor current ripple and the Equivalent Series Resistance of the output capacitor (ESRCOUT). Also note that the actual value of the capacitor's ESRCOUT is

OVREG Semiconductor (xi'an) Co.,Ltd.

frequency and temperature dependent, as specified by its manufacturer. The ESR should be calculated at the applicable switching frequency and ambient temperature.

$$V_{OUT-RIPPLE-PP} = \frac{I_{RIPPLE}}{8 * F_S * C_{OUT}}$$

Where

$$I_{RIPPLE} = \frac{D * (V_{IN} - V_{OUT})}{2 * L * F_S}$$

$$D = \frac{V_{OUT}}{V_{IN}}$$

where

•VOUT-RIPPLE-PP: estimated output voltage ripple

•IRIPPLE: estimated current ripple

•D: Estimated duty factor

Output ripple can be estimated from the vector sum of the reactive (capacitance) voltage component and the real (ESR) voltage component of the output capacitor:

$$V_{OUT-RIPPLE-PP} = \sqrt{V_{ROUT}^2 + V_{COUT}^2}$$

where

$$V_{ROUT} = I_{RIPPLE} * ESR_{COUT}$$

$$V_{COUT} = \frac{I_{RIPPLE}}{8 * F_S * C_{OUT}}$$

where

•VOUT-RIPPLE-PP: estimated output ripple,

•VROUT: estimated real output ripple,

•VCOUT: estimated reactive output ripple.

The device is designed to be used with ceramic capacitors on the outputs of the buck regulators. The recommended dielectric type of these capacitors is X5R, X7R, or of comparable material to maintain proper tolerances over voltage and temperature. The recommended value for the output capacitors is 10μF, 6.3V with an ESR of 2mΩ or less. The output capacitors need to be mounted as close as possible to the output/ground terminals of the device.

BUCK Input Capacitor Selection

Input capacitor should be located as close as possible to their corresponding VIN and GND terminals, tantalum capacitor can also be located in the proximity of the device.

The input capacitor supplies the AC switching current drawn from the switching action of the internal power MOSFETs. The input current of a buck converter is discontinuous, so the ripple current supplied by the input capacitor is large. The input capacitor must be rated to handle both the RMS current and the dissipated power. The input capacitor must be rated to handle this current:

$$V_{RMS_CIN} = I_{OUT} \frac{\sqrt{V_{OUT} * (V_{IN} - V_{OUT})}}{V_{IN}}$$

OVREG Semiconductor (xi'an) Co.,Ltd.

The power dissipated in the input capacitor is given by:

$$P_{D_CIN} = I^2_{RMS_CIN} * R_{ESR_CIN}$$

The device is designed to be used with ceramic capacitors on the inputs of the buck regulators. The recommended dielectric type of these capacitors is X5R, X7R, or of comparable material to maintain proper tolerances over voltage and temperature. The minimum recommended value for the input capacitor is 10µF with an ESR of 10mΩ or less. The input capacitors need to be mounted as close as possible to the power/ground input terminals of the device.

The input power source supplies the average current continuously. During the high side MOSFET switch on-time, however, the demanded di/dt is higher than can be typically supplied by the input power source. This delta is supplied by the input capacitor.

A simplified "worst case" assumption is that all of the high side MOSFET current is supplied by the input capacitor. This will result in conservative estimates of input ripple voltage and capacitor RMS current.

Input ripple voltage is estimated as follows:

$$V_{PPIN} = \frac{I_{OUT} * D}{C_{IN} * F_S} + I_{OUT} * ESR_{CIN}$$

where

•VPPIN: Estimated peak-to-peak input ripple voltage

•IOUT: Output current

•CIN: Input capacitor value

•ESRCIN: Input capacitor ESR

This capacitor is exposed to significant RMS current, so it is important to select a capacitor with an adequate RMS current rating. Capacitor RMS current estimated as follows:

$$I_{RMSCIN} = \sqrt{D * (I^2_{OUT} + \frac{I^2_{RIPPLE}}{12})}$$

Where

•I_{RMSCIN}: Estimated input capacitor RMS current

Layout Guidelines

PC board layout is an important part of DC-DC converter design. Poor board layout can disrupt the performance of a DC-DC converter and surrounding circuitry by contributing to EMI, ground bounce, and resistive voltage loss in the traces. These can send erroneous signals to the DC-DC converter resulting in poor regulation or instability. Good layout can be implemented by following a few simple design rules.

1. Minimize area of switched current loops. In a buck regulator there are two loops where currents are switched rapidly. The first loop starts from the CIN input capacitor, to the regulator VIN terminal, to the regulator SW terminal, to the inductor then out to the output capacitor COUT and load. The second loop starts from the output capacitor ground, to the regulator GND terminals, to the inductor and then out to COUT and the load. To minimize both loop areas the input capacitor should be placed as close as possible to the VIN terminal. Grounding for both the input and output capacitors should consist of a small localized top side plane that connects to GND. The inductor should be placed as close as possible to the SW pin and output capacitor.

OVREG Semiconductor (xi'an) Co.,Ltd.

2. Minimize the copper area of the switch node. The SW terminals should be directly connected with a trace that runs on top side directly to the inductor. To minimize IR losses this trace should be as short as possible and with a sufficient width. However, a trace that is wider than 100 mils will increase the copper area and cause too much capacitive loading on the SW terminal. The inductors should be placed as close as possible to the SW terminals to further minimize the copper area of the switch node.

3. Have a single point ground for all device analog grounds. The ground connections for the feedback components should be connected together then routed to the GND pin of the device. This prevents any switched or load currents from flowing in the analog ground plane. If not properly handled, poor grounding can result in degraded load regulation or erratic switching behavior.

4. Minimize trace length to the FB terminal. The feedback trace should be routed away from the SW pin and inductor to avoid contaminating the feedback signal with switch noise.

5. Make input and output bus connections as wide as possible. This reduces any voltage drops on the input or output of the converter and can improve efficiency. If voltage accuracy at the load is important make sure feedback voltage sense is made at the load. Doing so will correct for voltage drops at the load and provide the best output accuracy.

OVREG Semiconductor (xi'an) Co.,Ltd.

PACKAGE INFORMATION

QFN4x4-24L

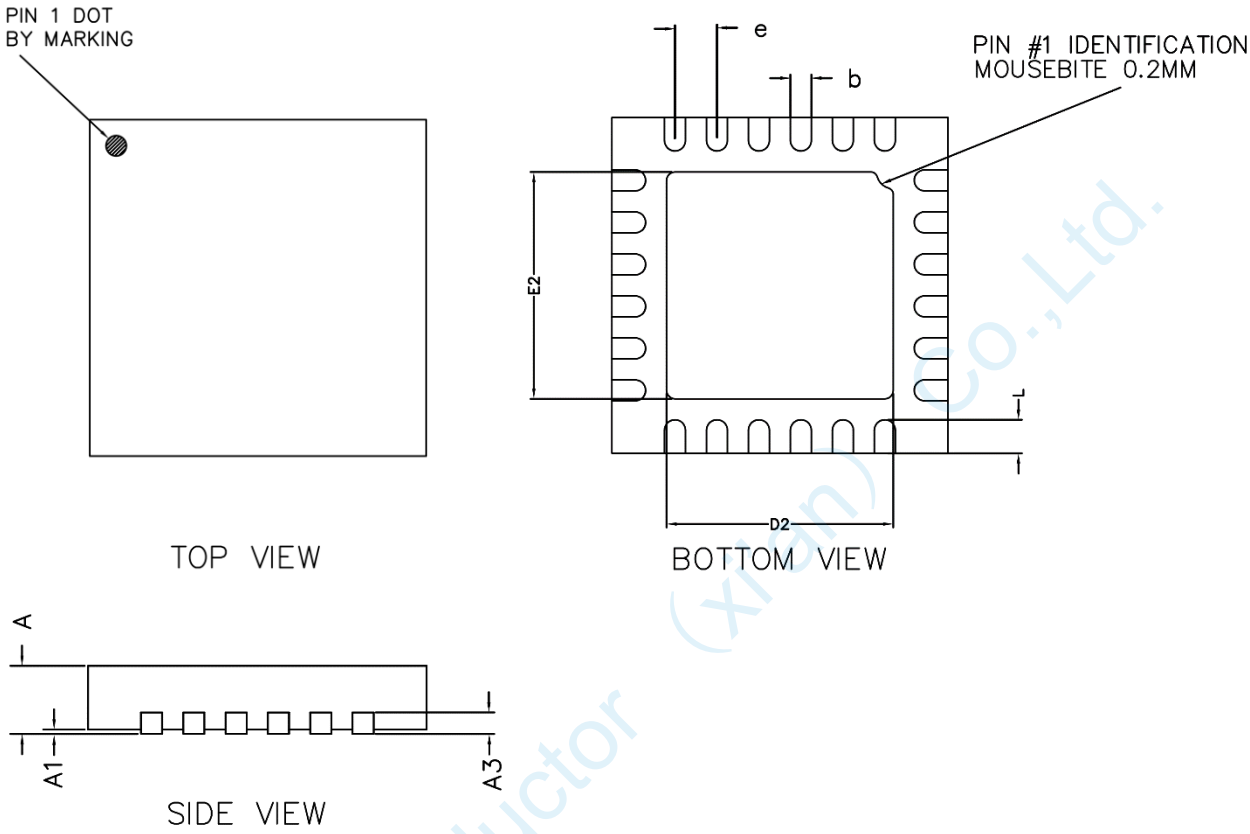

Unit: mm

Symbol	Dimensions In Millimeters			Symbol	Dimensions In Millimeters		
	Min	Typ	Max		Min	Typ	Max
A	0.70	0.75	0.80	b	0.18	0.23	0.28
A1	0.00	-	0.05	L	0.30	0.40	0.50
A3	-	0.20 REF	-	D2	2.55	2.70	2.80
D	3.95	4.00	4.05	E2	2.55	2.70	2.80
E	3.95	4.00	4.05	e	0.50 BSC		

Ordering Information

Part number	Material	Type	MOQ
OV21674PU	GREEN	T/R	3k/reel

OVREG Semiconductor (xi'an) Co.,Ltd.