High Input Voltage & Low Power CMOS LDO

OV1153 series is a set of three-terminal middle current low voltage regulator implemented in CMOS technology. They can deliver 300mA output current and allow an input voltage as high as 12V. They are available with several fixed output voltages ranging from 1.5V to 5.0V. CMOS technology ensures low voltage drop and low quiescent current. Although designed primarily as fixed voltage regulators, these devices can be used with external components to obtain variable voltages and currents.

Features

- ✧ High input voltage: 12V
- ✧ Output Voltage Range: 1.5V to 5.0V
- ✧ Maximum Output Current: 300mA
- ✧ Highly Accurate: ± 2%
- ✧ Internal current limiter
- ✧ Low power consumption: 2μA (TYP.)
- ✧ SOT89-3L,SOT23-3L, SOT23-5L Package

Applications

- ✧ Battery-powered devices
- ✧ Portable mobile devices
- ✧ Wireless communication equipment

Mechanical Data

- ✧ UL Flame Rating : UL94V-0
- ✧ Reel Size : 7 inch
- ✧ RoHS/WEEE Compliant

Pin Assignment

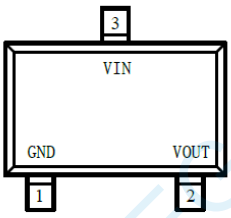

SOT23-3L
(TOP VIEW)

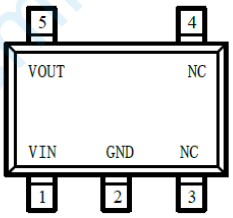

SOT23-5L
(TOP VIEW)

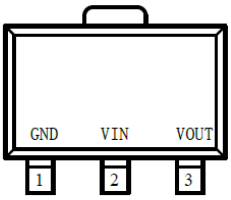

SOT89-3L
(TOP VIEW)

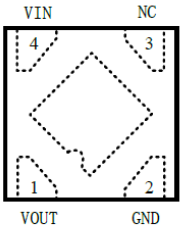

DFN1010-4L
(TOP VIEW)

Pin Number				Pin Name	Function Description
SOT23-5L	SOT89-3L	DFN1010-4L	SOT23-3L		
2	1	2	1	GND	Ground
1	2	4	3	VIN	Input
5	3	1	2	VOUT	Output
3	-	3	-	NC	Not connected
4	-	-	-	NC	Not connected

OVREG Semiconductor (Xi'an) Co.,Ltd.

Absolute Maximum Rating at T_A = 25 °C, unless otherwise specified

Parameter		Symbol	Maximum Rating	Unit
Input Voltage		Vin	-0.3～18	V
Power Disspation	SOT89-3L	Pd	500	mW
	SOT23-3/5L		250	
	DFN1010-4L		150	
Operating Ambient Temperature		Topr	-40～+85	℃
Storage Temperature		Tstg	-40～+125	℃

Note: The absolute maximum ratings are rated values exceeding which the product could suffer physical damage. These values must therefore not be exceeded under any conditions.

Electrical Characteristics at T_A = 25 °C, unless otherwise specified

Symbol	Parameters	Test Conditions		Min.	Typ.	Max.	Unit
		V_{IN}	Conditions				
V_{OUT}	Output Voltage Tolerance	V_{OUT+}1V	I_{OUT}=10mA	0.98×V_{OUT}	V_{OUT}[1]	1.02×V_{OUT}	V
I_{OUT}	Output Current	V_{OUT+}1V	-	-	300	-	mA
Δ V_{OUT}	Load Regulation	V_{OUT+}1V	1mA≤I_{OUT}≤300mA	-	60	100	mV
V_{DIF}	Voltage Drop	-	I_{OUT}=100mA, V_{OUT} =3.0	-	200	-	mV
I_{SS}	Current Consumption	V_{OUT+}1V	no load	-	2.0	3	uA
$\frac{\Delta V_{OUT}}{\Delta V_{IN} \times V_{OUT}}$	Line Regulation	-	V_{OUT+}1V≤V_{IN}≤12 I_{OUT}=1mA	-	0.2	-	%/V
V_{IN}	Input Voltage	-	-	3.0	-	12	V
|PSRR|	Ripple rejection rate	-	V_{CE} =V_{IN}=$V_{OUT(S)}$+1.0 V, f=1.0 kHz Vrip=0.5 Vrms, I_{OUT}=30 mA	-	45	-	dB
△V_{OUT}	Temperature Coefficient	V_{OUT+}1V	I_{OUT}=10mA 0℃≤T_a≤70℃	-	300	-	mV

OVREG Semiconductor (Xi'an) Co.,Ltd.

Block Diagram

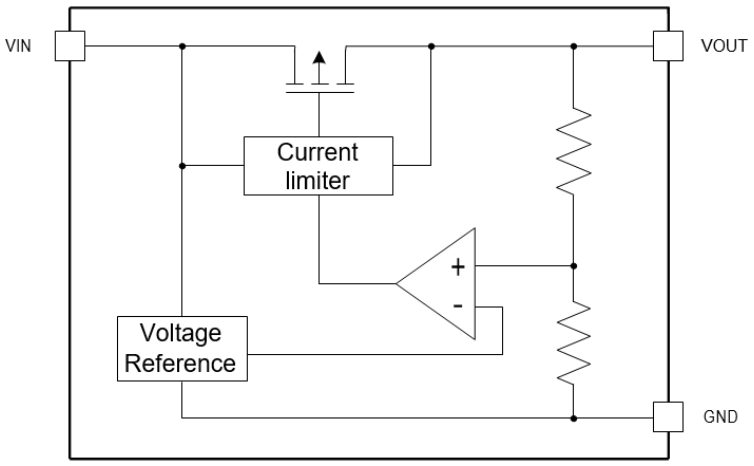

Typical Applications

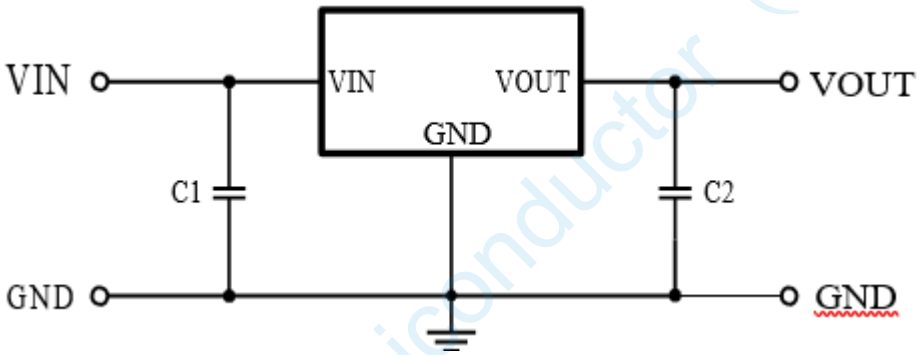

Note:

1、Setting the Input Capacitor and the Output Capacitor

Input capacitors（CIN）and output capacitors(COUT) are recommended to use more than 1uF, which can ensure the stability of the system

2、PCB Layout

In order to get better use effect, the main points for attention of PCB layout are as follows:

（1）The input and output capacitors are as close as possible to the chip pins.

（2）The wiring of VIN and VOUT should be as thick as possible to reduce the wiring resistance and improve the load performance.

（3）The route from GND(pin) to GND uses a dedicated channel to prevent parasitic resistance from introducing into the change path, which results in incorrect feedback ratio and output error.

OVREG Semiconductor (Xi'an) Co.,Ltd.

Typical Performance Characteristics

1. Quiescent Current VS Input Voltage

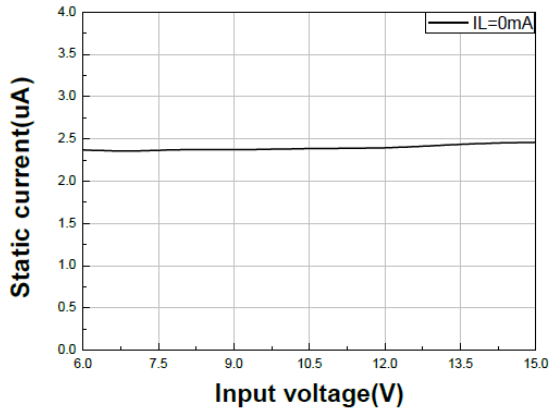

2. Output Voltage VS Input Voltage

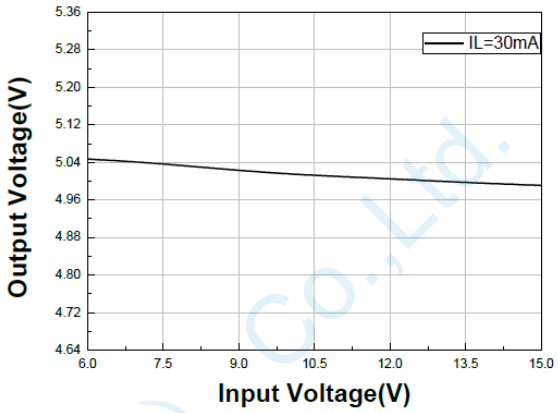

3. Output Current Limit VS Input Voltage

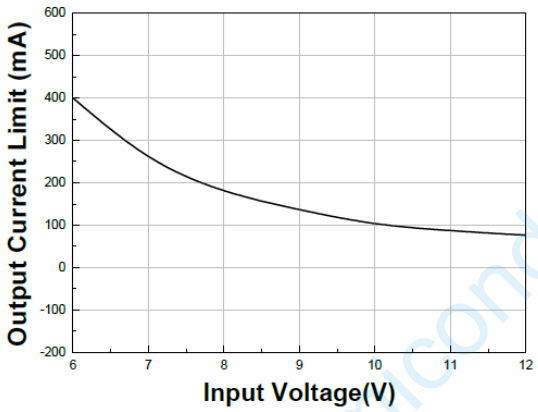

4. GND Pin Current VS Input Voltage

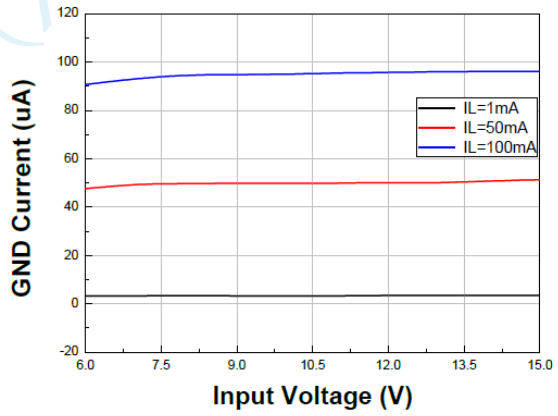

5. GND Pin Current VS Output Current

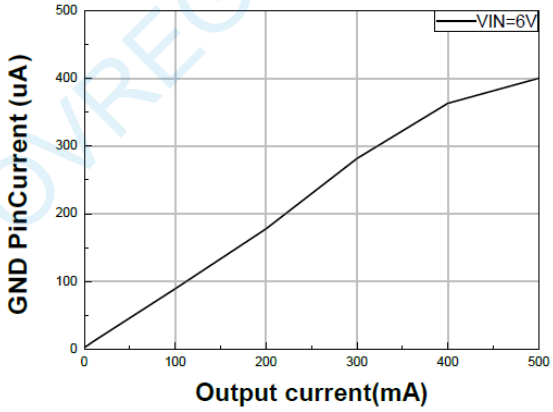

6. Quiescent Current VS Temperature

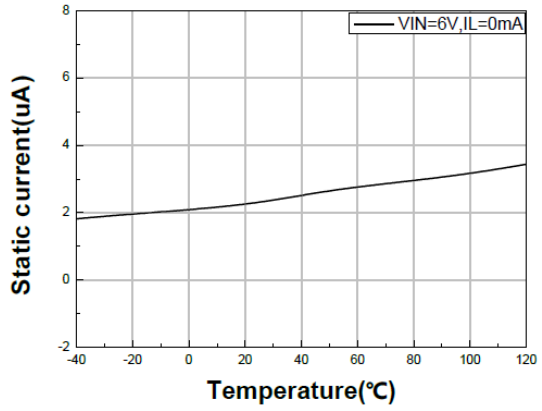

OVREG Semiconductor (Xi'an) Co.,Ltd.

7. Output Current Limit VS Temperature

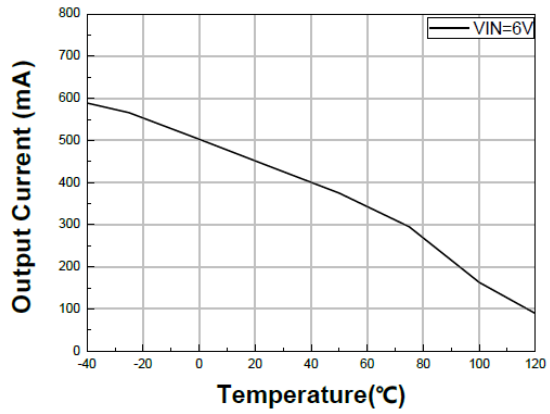

8. Output Voltage VS Temperature

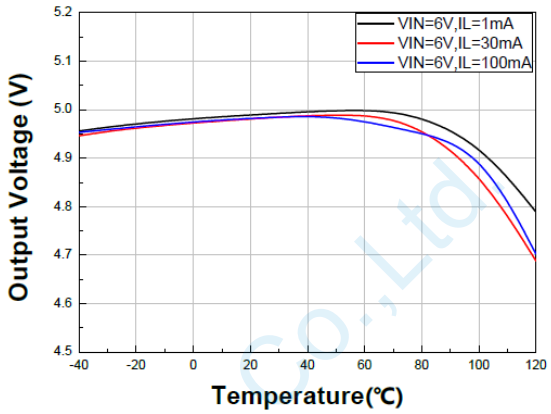

9. Load Regulation VS Temperature

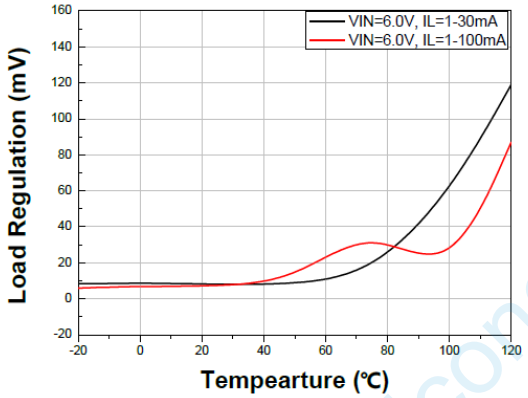

10. Back-injection Current of VOUT VS Output Voltage

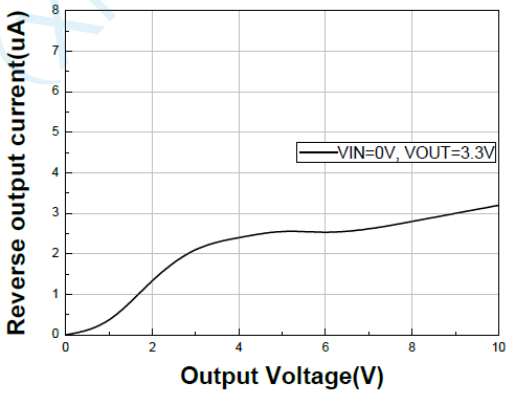

11. Short Circuit Current

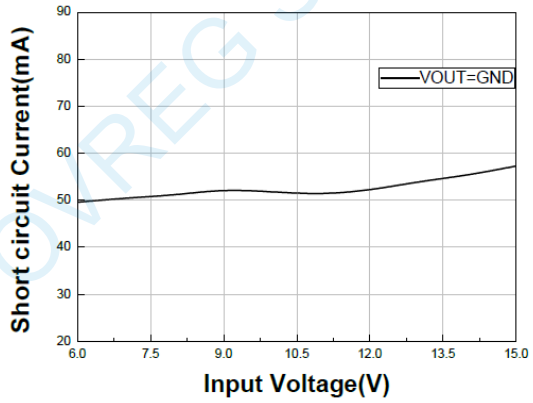

12. Back-injection Current of VOUT VS Temperature

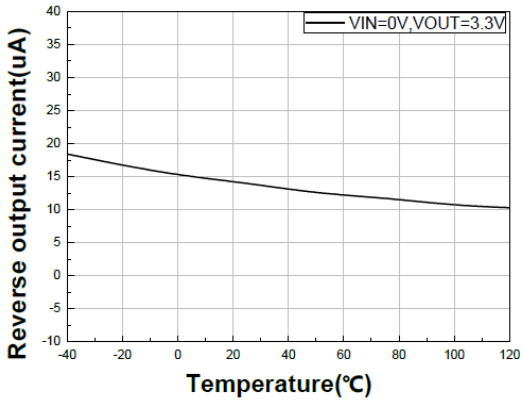

OVREG Semiconductor (Xi'an) Co.,Ltd.

13. Minimum Input Voltage

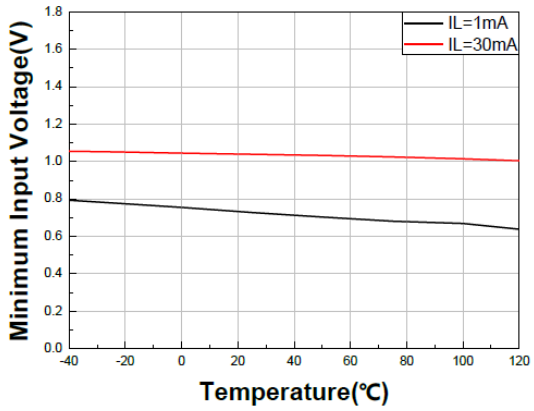

14. Output Voltage VS Output Current

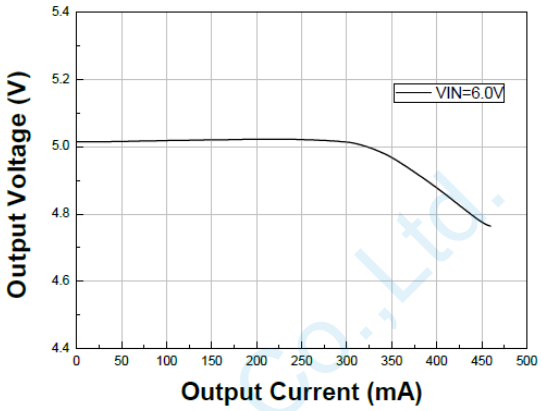

15. Load transient response (VIN=6V, IL=10-350-10mA)

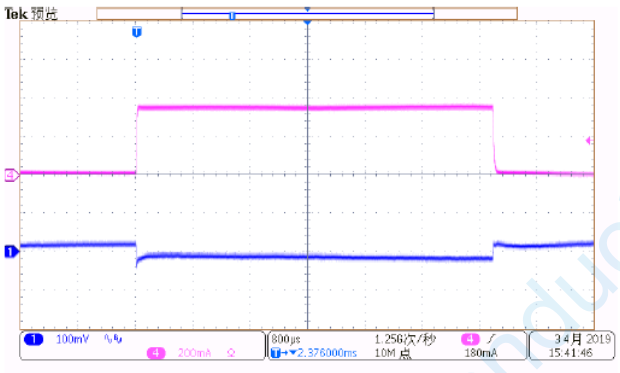

16. Load transient response (VIN=6V,IL=100-350-100mA)

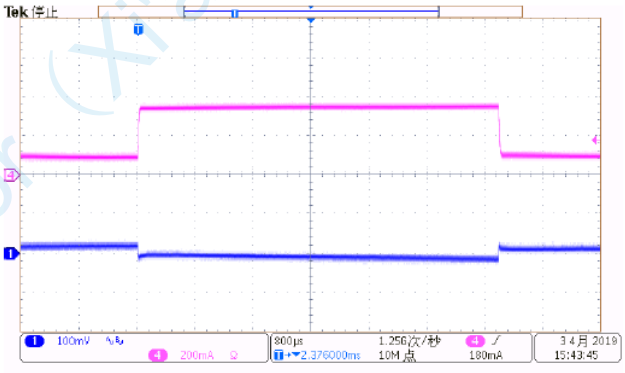

17. Input voltage transient response(VIN=6~7V, IL=30mA)

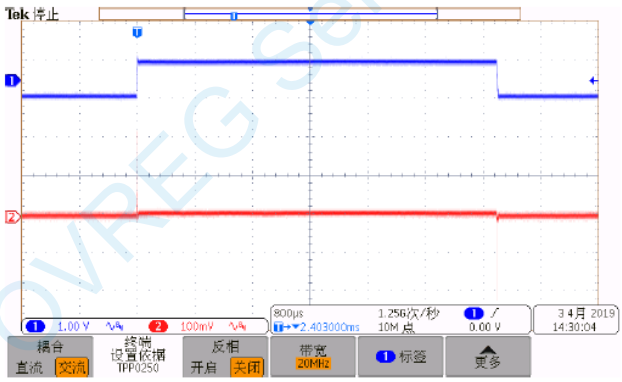

18. Ripple-Rejection (VIN=6V,IL=50mA,Vpp=1V,F=1KHZ)

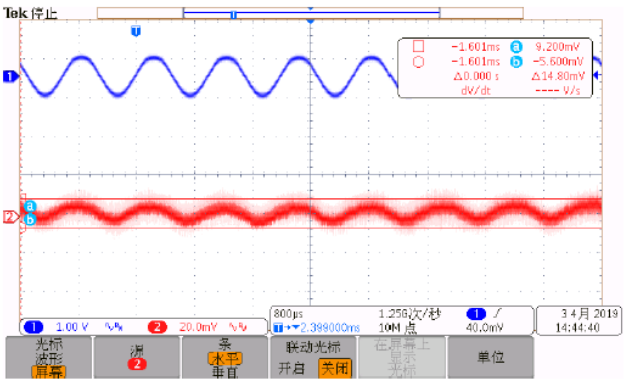

OVREG Semiconductor (Xi'an) Co.,Ltd.

Package Information

SOT89-3L

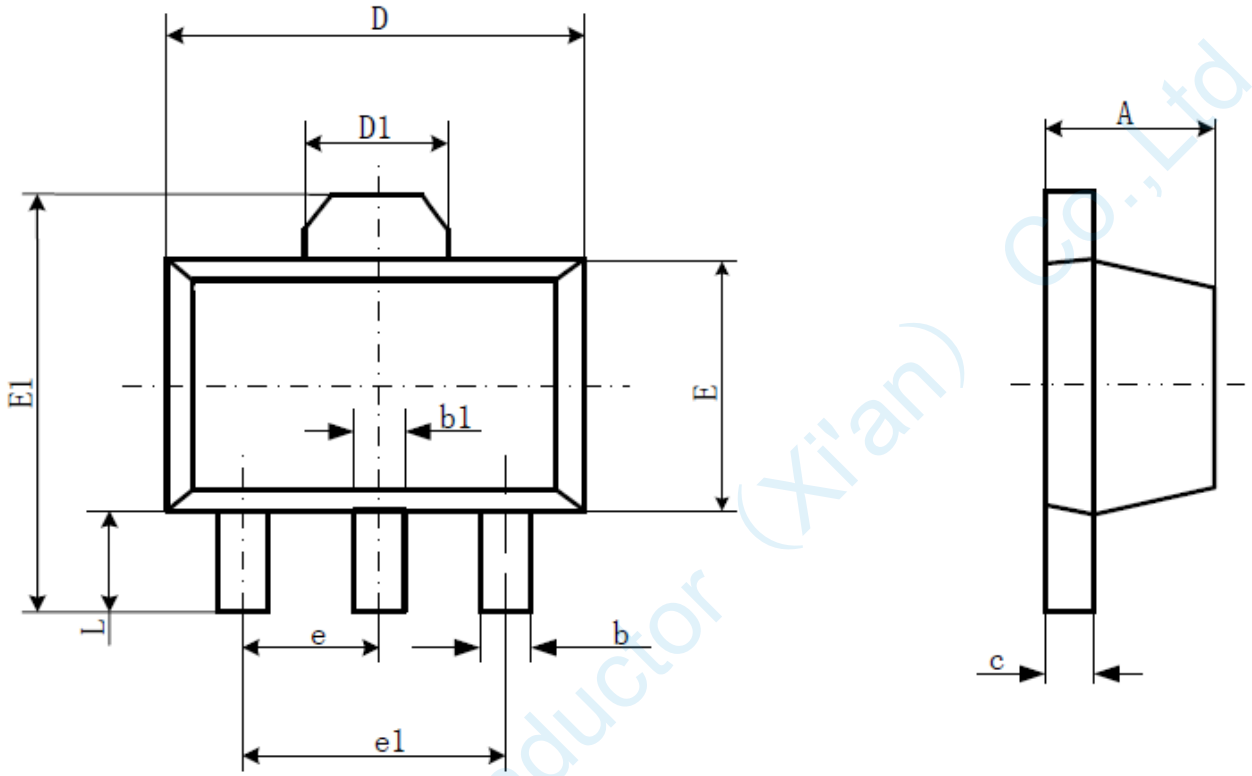

Symbol	Dimensions In Millimeters		Dimensions In Inches	
	Min	Max	Min	Max
A	1.400	1.600	0.055	0.063
b	0.320	0.520	0.013	0.020
b1	0.400	0.580	0.016	0.023
c	0.350	0.400	0.014	0.017
D	4.400	4.600	0.173	0.181
D1	1.550REF.		0.061REF.	
E	2.300	2.600	0.091	0.102
E1	3.940	4.250	0.155	0.167
e	1.500TYP		0.060TYP	
e1	3.000TYP		0.118TYP	
L	0.900	1.200	0.035	0.047

OVREG Semiconductor (Xi'an) Co.,Ltd.

SOT23-3L

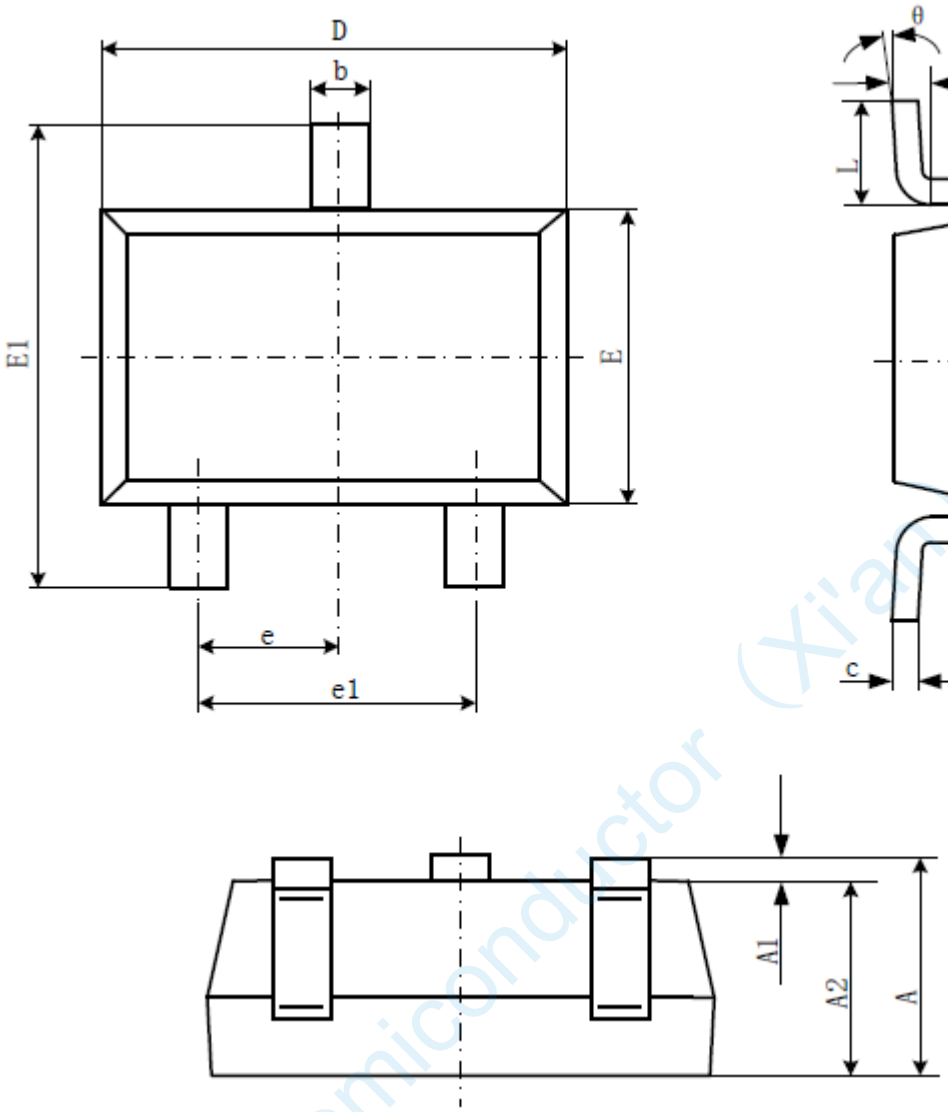

Symbol	Dimensions In Millimeters		Dimensions In Inches	
	Min	Max	Min	Max
A	1.050	1.250	0.041	0.049
A1	0.000	0.100	0.000	0.004
A2	1.050	1.150	0.041	0.045
b	0.300	0.500	0.012	0.020
c	0.100	0.200	0.004	0.008
D	2.820	3.020	0.111	0.119
E	1.500	1.700	0.059	0.067
E1	2.650	2.950	0.104	0.116
e	0.950(BSC)		0.037(BSC)	
e1	1.800	2.000	0.071	0.079
L	0.300	0.600	0.012	0.024
θ	0°	8°	0°	8°

OVREG Semiconductor (Xi'an) Co.,Ltd.

SOT23-5L

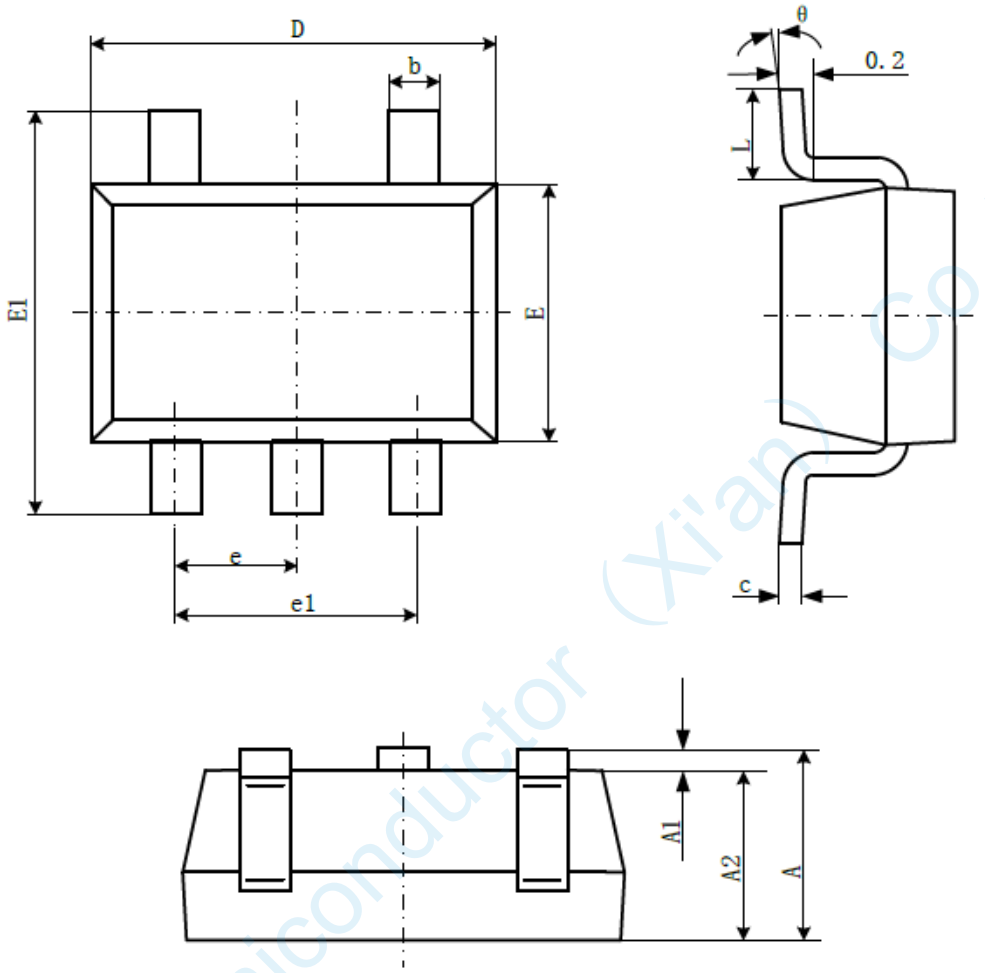

Symbol	Dimensions In Millimeters		Dimensions In Inches	
	Min	Max	Min	Max
A	1.050	1.250	0.041	0.049
A1	0.000	0.100	0.000	0.004
A2	1.050	1.150	0.041	0.045
b	0.300	0.500	0.012	0.020
c	0.100	0.200	0.004	0.008
D	2.820	3.020	0.111	0.119
E	1.500	1.700	0.059	0.067
E1	2.650	2.950	0.104	0.116
e	0.950(BSC)		0.037(BSC)	
e1	1.800	2.000	0.071	0.079
L	0.300	0.600	0.012	0.024
θ	0°	8°	0°	8°

OVREG Semiconductor (Xi'an) Co.,Ltd.

DFN1010-4L

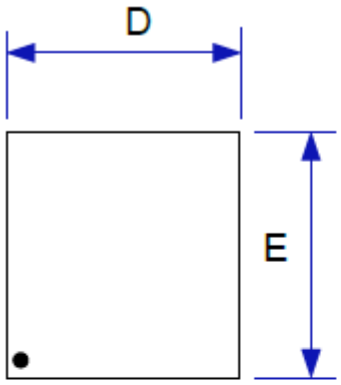

TOP VIEW

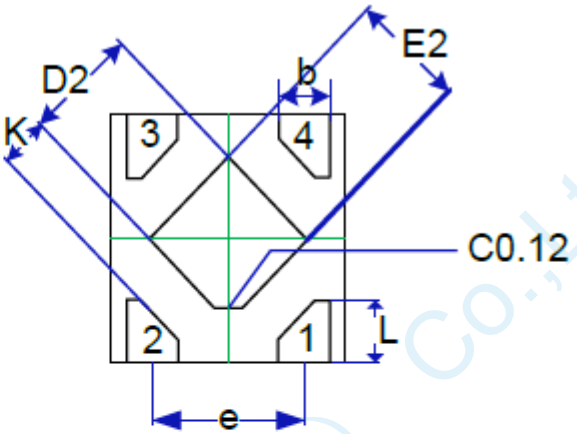

BOTTOM VIEW

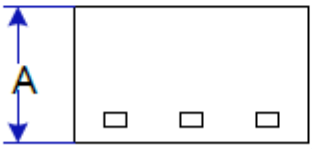

SIDE VIEW

Symbol	Dimensions In Millimeters		Dimensions In Inches	
	Min	Max	Min	Max
A	0.34	0.40	0.013	0.016
b	0.17	0.27	0.007	0.011
D	0.95	1.05	0.037	0.041
E	0.95	1.05	0.037	0.041
D2	0.43	0.53	0.017	0.021
E2	0.43	0.53	0.017	0.021
L	0.20	0.30	0.008	0.012
e	0.60	0.70	0.024	0.028
K	0.15	-	0.006	

OVREG Semiconductor (Xi'an) Co.,Ltd.

Ordering Information

OV1153 B ③④⑤⑥⑦-⑧
①②

Item	Symbol	Description	Item	Symbol	Description
①	53	Product number	⑤	2	Output voltage accuracy±2%
②	B	Low power products	⑥	M	SOT23-3L
				F	SOT23-5L
				D	DFN1010-4L
				P	SOT89-3L
			⑦	R	Embossed Tape: Standard Feed
③④	12-50	Output voltage:Eg: ③ =3, ④ =0 represents 3.0V		L	Embossed Tape: Reverse Feed
			⑧	G	Green epoxy molding compound

OVREG Semiconductor (Xi'an) Co.,Ltd.