15V,500mA,1uA,80dB,Low-Dropout Voltage Regulator With Enable

The OV1151 series is an ultra-small, low dropout (LDO) linear regulator that can source 500mA of output current. The OV1151 series is designed to provide high PSRR, high input voltage, and excellent load and line transient performance. The OV1151 series has thermal shutdown, current limit, and short circuit protections for added safety. Shutdown mode is enabled by pulling the EN pin low. The OV1151 series contains eight fixed output voltages of 1.8V, 2.5V, 2.8V, 3.0V, 3.3V, 3.6V, 4.0V and 5.0V.

Features

- ✧ Low quiescent current : 1uA
- ✧ Input voltage range : 1.9V to 15V
- ✧ High output current : 500mA
- ✧ High PSRR : 80dB at 1kHz
- ✧ Low dropout voltage : 120mV at 100mA
- ✧ Fixed output voltages : 1.8V, 2.5V, 2.8V, 3.0V, 3.3V, 3.6V, 4.0V and 5.0V
- ✧ Output voltage accuracy : ±2%
- ✧ Fast transient response
- ✧ Current limit protection
- ✧ Short circuit protection
- ✧ Thermal shutdown protection
- ✧ Available packages: SOT23-3, SOT89-3, SOT23-5, SOT89-5

Applications

- ✧ Battery-powered equipment
- ✧ Smoke detector and sensor
- ✧ Micro controller applications
- ✧ Home appliance

Mechanical Data

- ✧ RoHS/WEEE Compliant

Typical Application

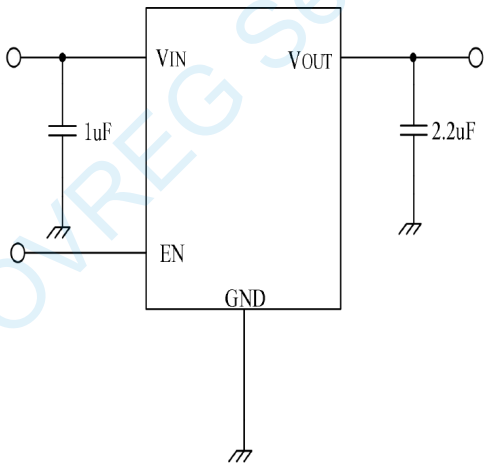

15V, Low-Dropout Voltage Regulator

PSRR

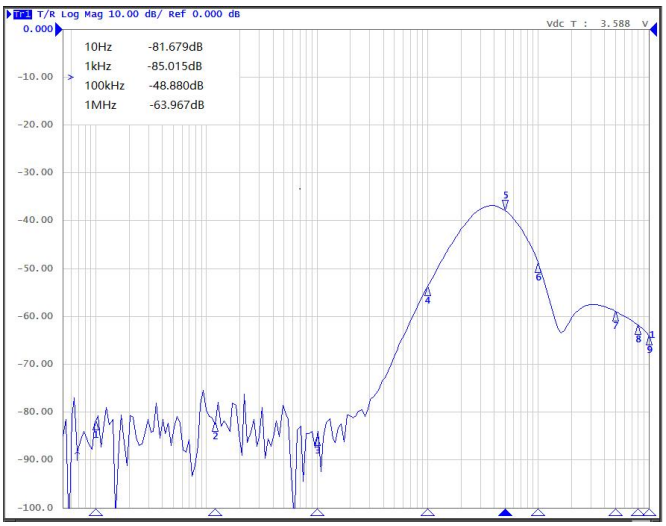

V_{IN}=5.6V,V_{OUT}=3.6V,I_{OUT}=10mA

I =10mA

OVREG Semiconductor (Xi'an) Co.,Ltd.

Pin Configuration and Functions

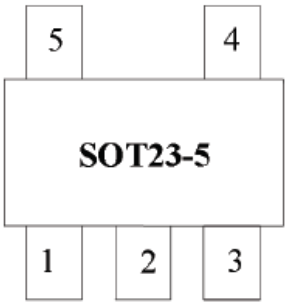

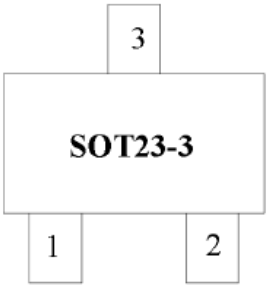

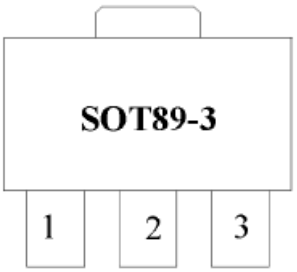

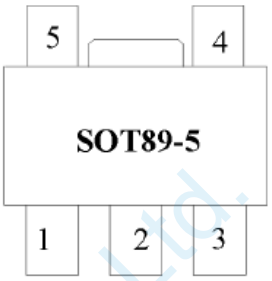

Pin	SOT23-3	SOT89-3	SOT23-5	SOT89-5	Description
	OV1151xxBM	OV1151xxBP	OV1151xxBF	OV1151xxBQ	
VIN	3	2	1	4	Input pin
GND	1	1	2	2	Ground pin
EN			3	3	Enable pin
NC			4	1	No connection
VOUT	2	3	5	5	Output pin

OVREG Semiconductor (Xi'an) Co.,Ltd.

Absolute Maximum Ratings

Parameter	Description	Min	Max	Unit
Input voltage	VIN to GND	-0.3	18	V
	VOUT to GND	-0.3	7	V
	VIN to VOUT	-0.3	18	V
Current	Peak output current	Internally limited		
Temperature	Operating temperature range	-40	125	℃
	Storage temperature	-40	150	℃
Thermal resistance (junction to ambient)	SOT89-3,SOT89-5	130		℃/W
	SOT23-3,SOT23-5	200		℃/W
Power dissipation	SOT89-3,SOT89-5	900		mW
	SOT23-3,SOT23-5	600		mW

Note:

exceeding the range specified by the rated parameters will cause damage to the chip, and the working state of the chip beyond the range of rated parameters cannot be guaranteed. Exposure outside the rated parameter range will affect the reliability of the chip.

ESD Ratings

Parameter	Description	Range	Unit
V_{ESD}	Human body model(HBM)	4	KV

Note:

JEDEC document JEP155 states that 500-V HBM allows safe manufacturing with a standard ESD control process.

OVREG Semiconductor (Xi'an) Co.,Ltd.

Electrical Characteristics

(At T_A=25°C, C_{IN}=1uF, V_{IN}=V_{OUTNOM}+1.0V, V_{OUT}=3.6V,C_{OUT}=2.2uF, unless otherwise noted)

Symbol	Parameter	Test Conditions	Min	Typ	Max	Unit
V_{IN}	Operating input voltage	V_{OUT} = 1.8V	1.9	—	15	V
I_{GND}	Quiescent current	V_{IN} = 12V, No load	—	1	1.2	uA
$I_{ShutDown}$	Shutdown current	V_{IN} = 12V, V_{EN} = 0V	—	—	0.3	uA
V_{OUT}	Output voltage	V_{IN} = 12V, I_{OUT} = 10mA	V_{OUTNOM} * 0.98	V_{OUTNOM}	V_{OUTNOM} * 1.02	V
I_{OUT_MAX}	Output current	V_{IN} = V_{OUTNOM} + 1V	500	—	—	mA
V_{DROP}	Dropout voltage(1)	I_{OUT} = 100mA , V_{IN} = V_{OUTNOM} - 0.1V	—	120	—	mV
$\Delta V_{OUT}/\Delta I_{OUT}$	Load regulation	V_{IN} = V_{OUTNOM} + 1V, 1mA ≤ I_{OUT} ≤ 500mA	—	0.1	—	mV/mA
$\Delta V_{OUT}/\Delta V_{IN}$	Line regulation	I_{OUT} = 1mA, V_{OUTNOM} + 1V ≤ V_{IN} ≤ 15V	—	0.2	—	mV/V
V_{EN_H}	Enable high threshold	V_{IN} = 5V,V_{OUT} = 3.3V	0.7	—	—	V
V_{EN_L}	Enable low threshold	V_{IN} = 5V,V_{OUT} = 3.3V	—	—	0.4	
I_{LIMIT}	Current limit	V_{IN} = 7V	—	900	—	mA
I_{SHUT}	Shut Current	V_{IN} = 7V	—	160	—	mA
T_{SHDN}	Thermal shutdown temperature	Shutdown, temperature increasing	—	140	—	℃
		Reset, temperature decreasing	—	120	—	
PSRR	Power Supply Rejection Ratio	V_{IN} = 5.3V , I_{OUT} = 10mA F = 1kHz,V_{OUT} = 3.3V	—	80	—	dB

Note:

(1) Dropout Voltage is the voltage difference between the input and the output at which the output voltage drops 2% below its nominal value.

OVREG Semiconductor (Xi'an) Co.,Ltd.

Typical Characteristics

(Test Condition: T_A = 25°C,C_{IN} = 1uF,V_{IN} = V_{OUTNOM} + 1V,C_{OUT} = 2.2uF,V_{OUT} = 3.6V unless otherwise note)

Output Voltage vs. Input Voltage

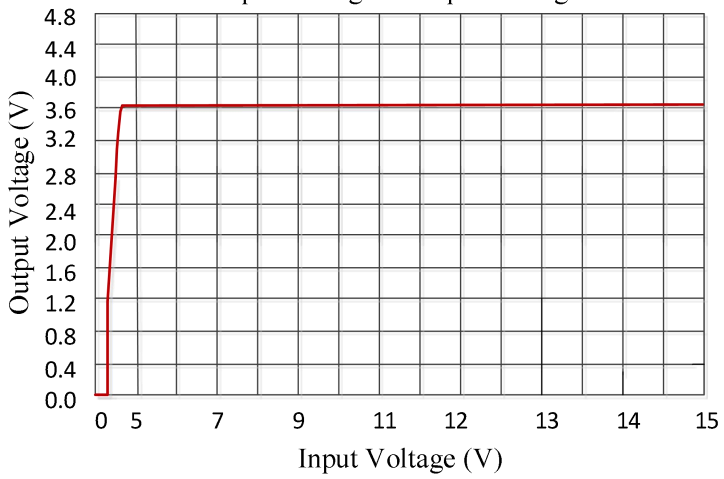

Output Voltage vs Temperature

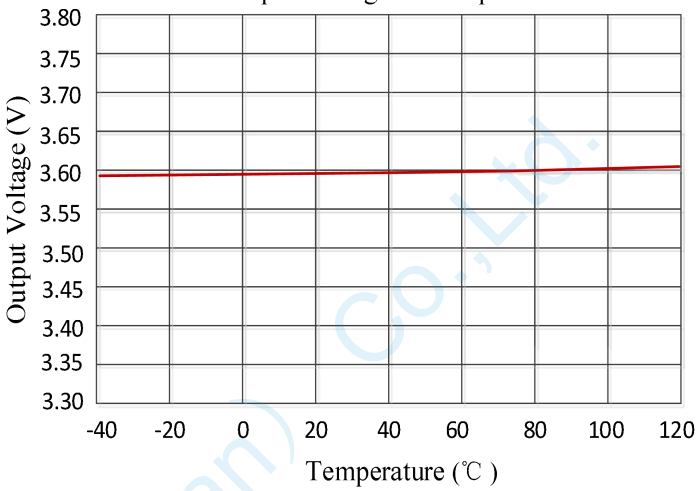

Dropout Voltage vs. Output Current

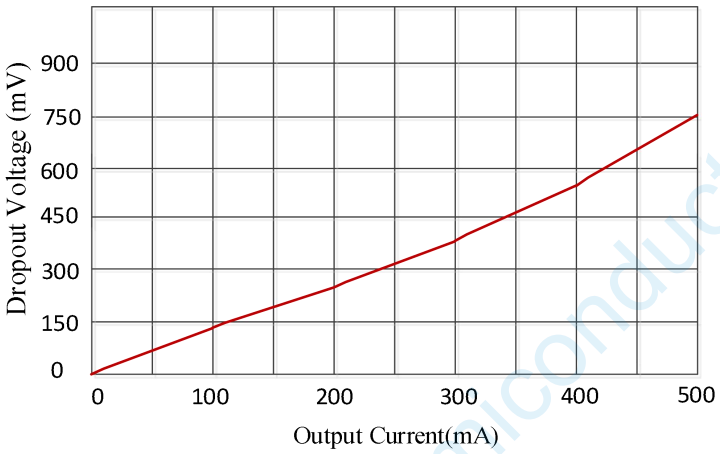

Quiescent Current vs.Temperature

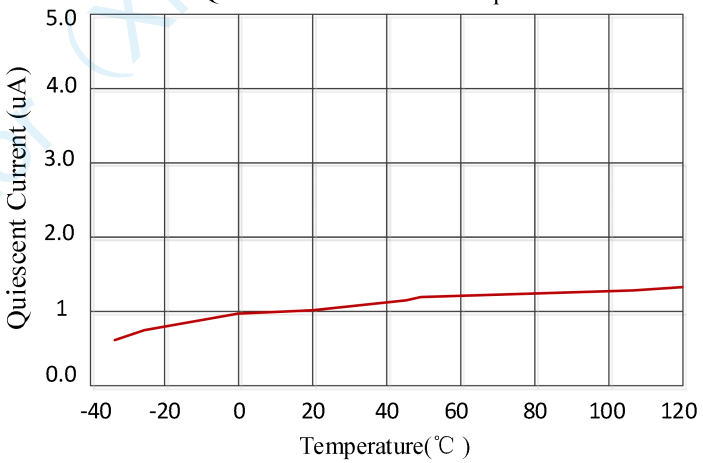

Quiescent Current vs. Input Voltage

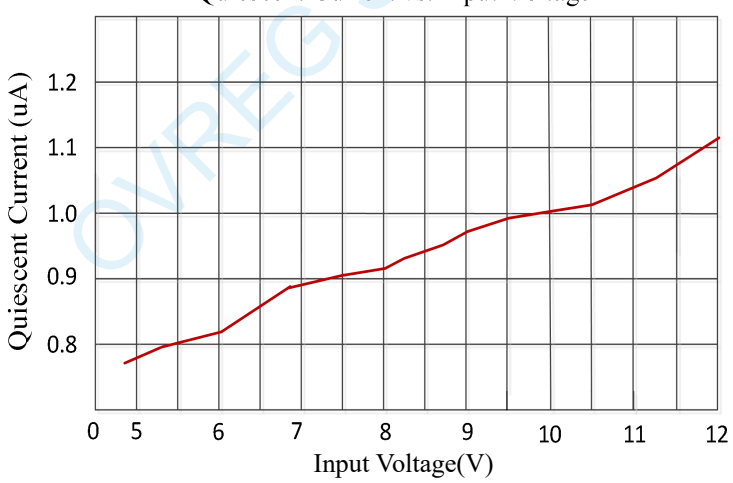

PSRR vs.frequency

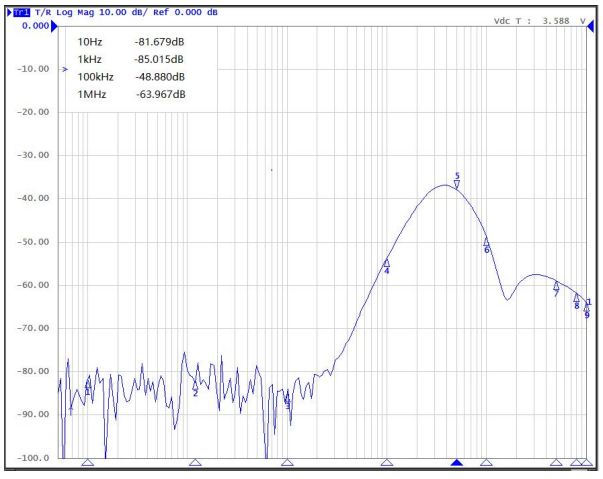

V_{IN}=5.6V,V_{OUT}=3.6V,I_{OUT}=10mA

I =10mA

OVREG Semiconductor (Xi'an) Co.,Ltd.

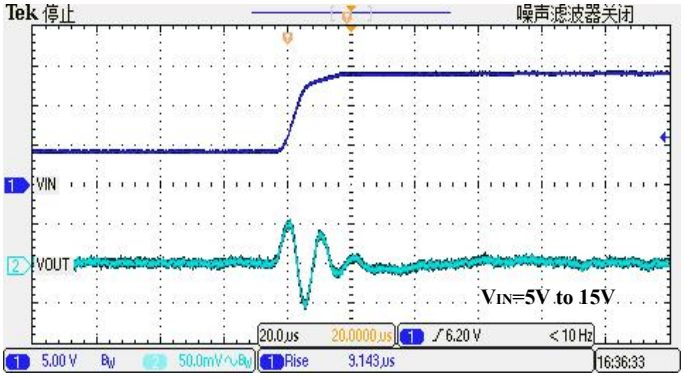

Line Transient Response

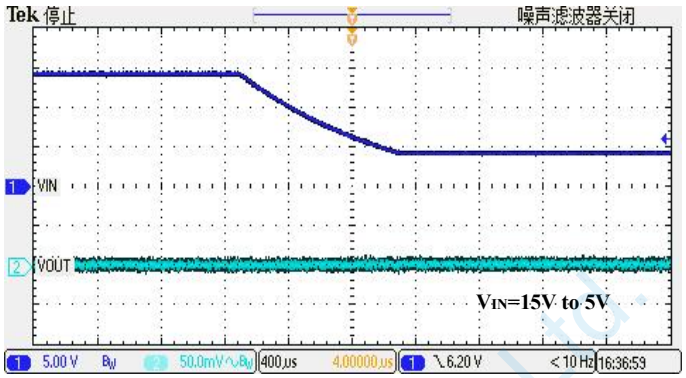

Line Transient Response

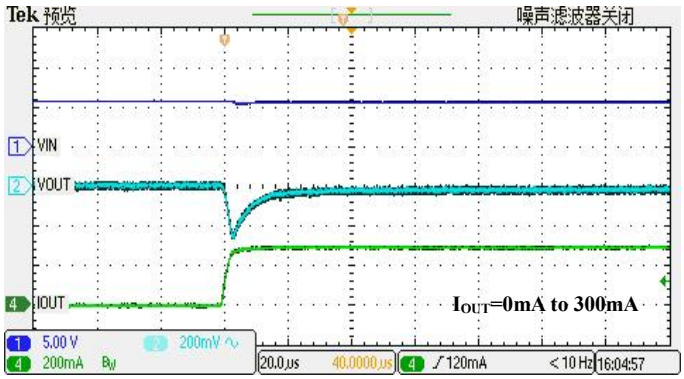

Load Transient Response

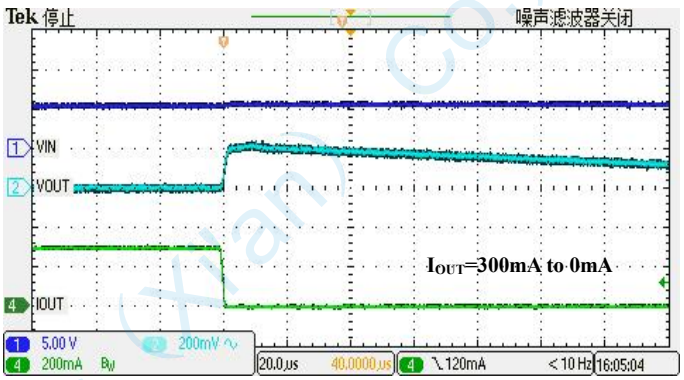

Load Transient Response

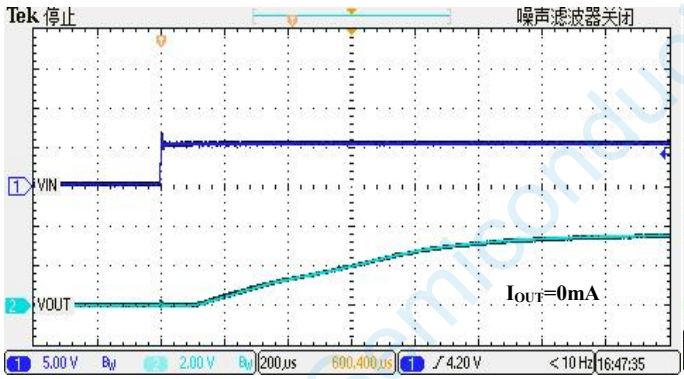

Start Up

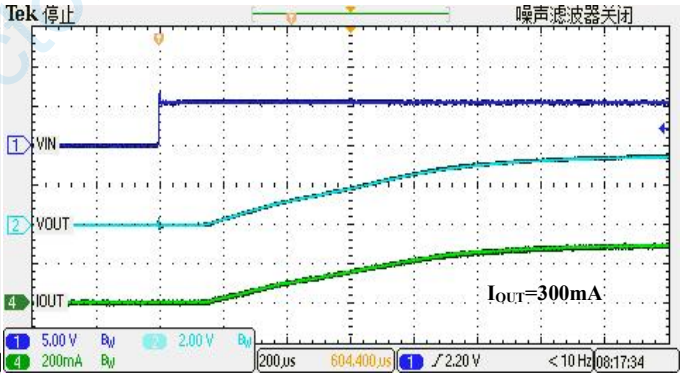

Start Up

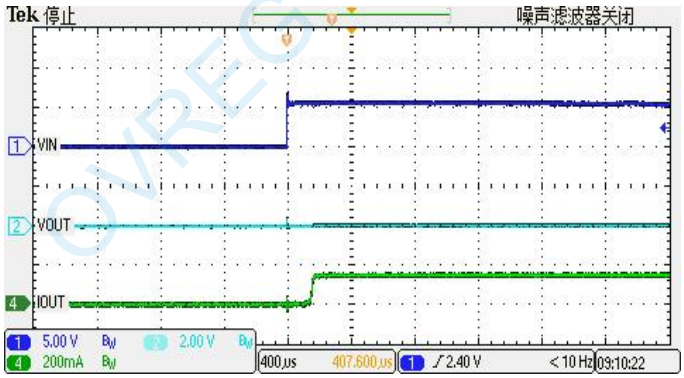

Short Circuit Protection

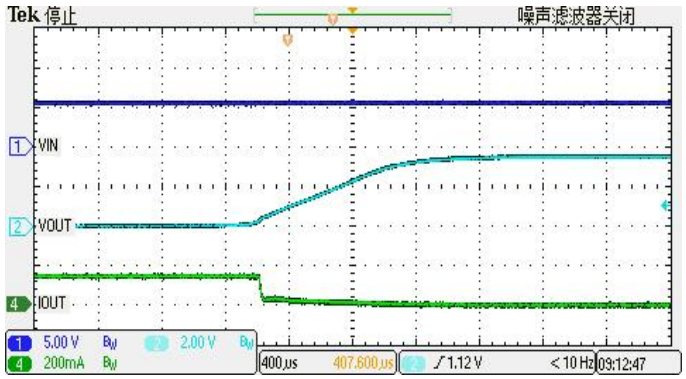

Short Circuit Protection

OVREG Semiconductor (Xi'an) Co.,Ltd.

Detailed Description

Overview

The OV1151 series is an ultra-small, low dropout (LDO) linear regulator that can source 500mA of output current. The OV1151 series is designed to provide high PSRR, high input voltage, and excellent load and line transient performance. The OV1151 series has thermal shutdown, current limit, and short circuit protections for added safety. Shutdown mode is enabled by pulling the EN pin low.

The OV1151 series contains eight fixed output voltages of 1.8V, 2.5V, 2.8V, 3.0V, 3.3V, 3.6V, 4.0V and 5.0V.

Functional Block Diagram

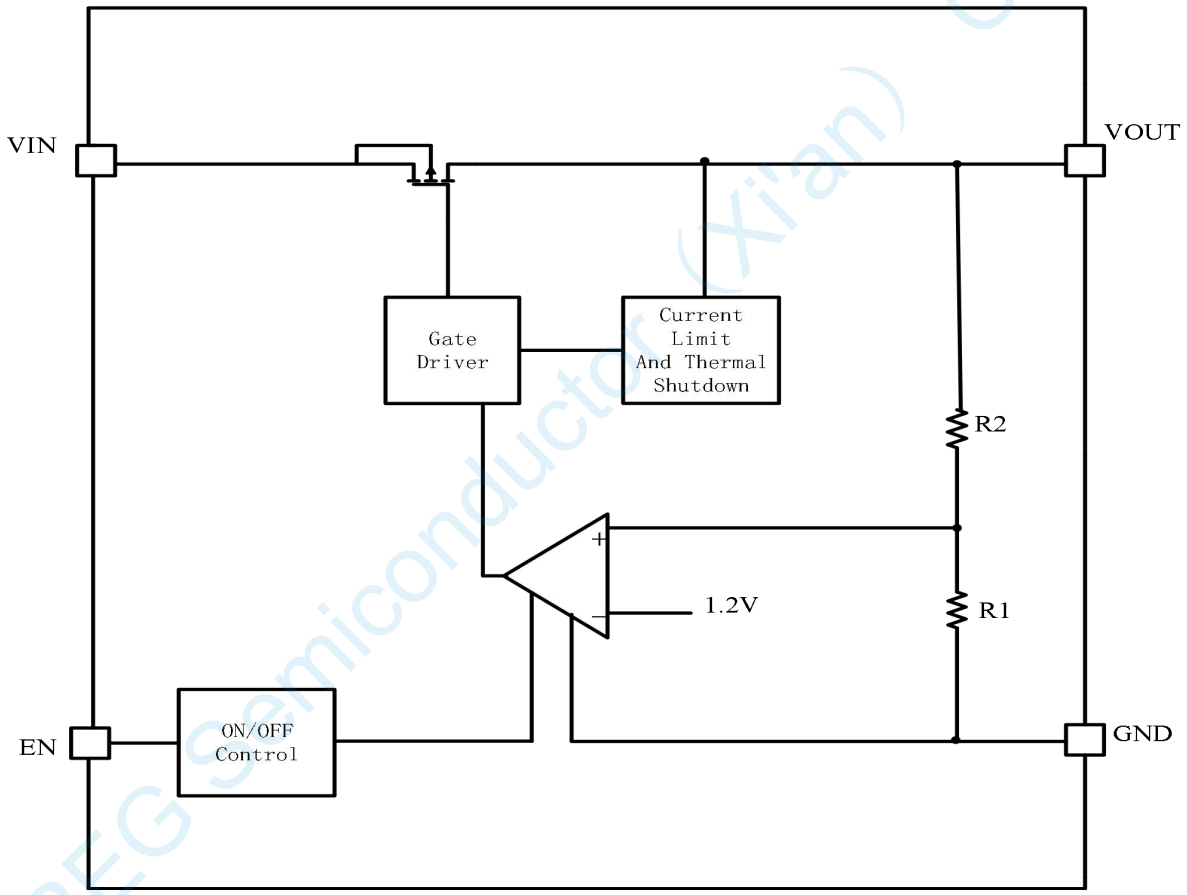

Functional Block Diagram

Input Capacitor and Output Capacitor

A 1uF ceramic capacitor is recommended to connect between VIN and GND pins to decouple input power supply glitch and noise. The amount of the capacitance may be increased without limit. This input capacitor must be located as close as possible to the device to assure input stability and less noise. For PCB layout, a wide copper trace is required for both VIN and GND.

An output capacitor is required for the stability of the LDO. The recommended minimum output capacitance is 2.2uF, ceramic capacitor is recommended, and temperature characteristics are X5R or X7R. Place output capacitor as close as possible to VOUT and GND pins.

OVREG Semiconductor (Xi'an) Co.,Ltd.

Current Limit and Short Circuit Protection

When output current at VOUT pin is higher than current limit threshold or the VOUT pin is direct short to GND, the current limit protection will be triggered and clamp the output current at a pre-designed level to prevent over-current and thermal damage.

Power Dissipation and Thermal Protection

The OV1151 series has internal thermal sense and protection circuits. When excessive power dissipation happens on the device, such as short circuit at the output pin or very heavy load current with a large voltage drop across the device, the internal thermal protection circuit will be triggered, and it will shut down the power MOSFET to prevent the LDO from damage. As soon as excessive thermal condition is removed and the temperature of the device drops down, the thermal protection circuit will lease the control of the power MOSFET, and the LDO device goes to normal operation.

Power dissipation caused by voltage drop across the LDO and by the output current flowing through the device needs to be dissipated out from the chip. The maximum junction temperature is dependent on power dissipation,package, the PCB layout, number of used Cu layers, Cu layers thickness and the ambient temperature.

During normal operation, LDO junction temperature should not exceed 125°C, or else it may result in deterioration of the properties of the chip. Using below equations to calculate the power dissipation and estimate the junction temperature.

The power dissipation can be calculated using Equation (1).

$$P_D = (V_{IN} - V_{OUT}) \times I_{OUT} \quad (1)$$

The junction temperature can be estimated using Equation . $R_{\theta JA_EVM}$ is the junction-to-ambient thermal resistance based on customer's PCB. Verify the application and allow sufficient margins in the thermal design by the Equation (2).

$$T_J = T_A + P_D \times R_{\theta JA_EVM} \quad (2)$$

$R_{\theta JA_EVM}$ is a critical parameter and depends on many factors such as the following:

· Power dissipation
· Air temperature/flow
· PCB area
· Copper heat-sink area
· Number of thermal vias under the package
· Adjacent component placement

OVREG Semiconductor (Xi'an) Co.,Ltd.

Packaging Information

SOT23-3

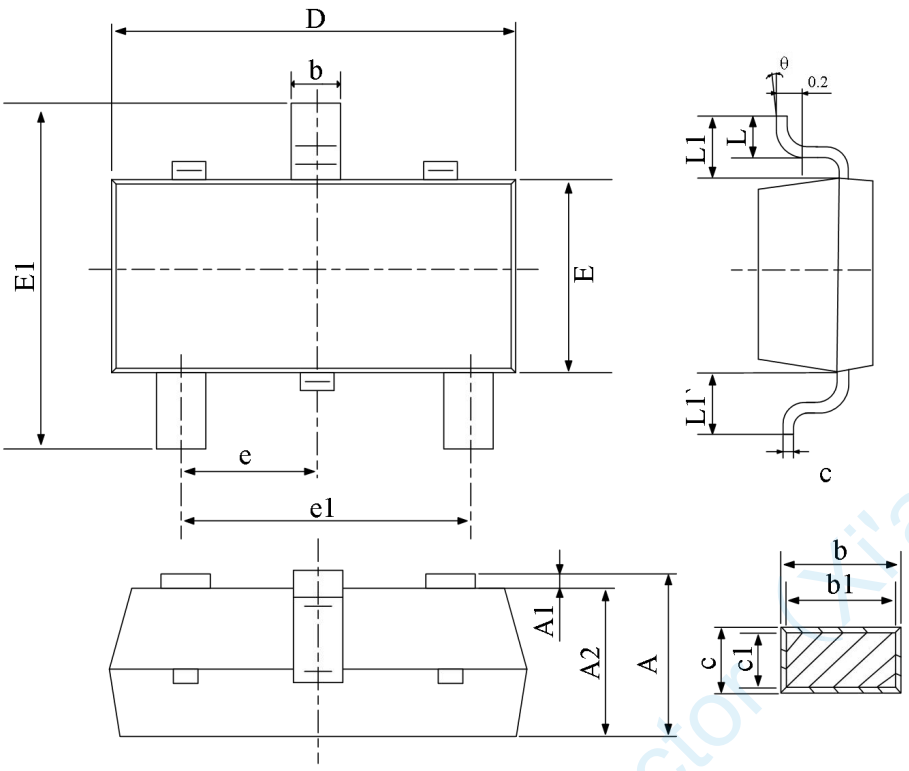

REF.	Millimeter	
	Min.	Max.
A	1.05	1.25
A1	0	0.1
A2	1.05	1.15
b	0.30	0.50
b1	0.29	0.47
c	0.10	0.20
c1	0.10	0.18
D	2.85	3.05
E	1.50	1.70
E1	2.65	2.95
e	0.95(BSC)	
e1	1.80	2.00
L	0.30	0.60
L1-L1`	-	0.12
θ	0°	8°

SOT89-3

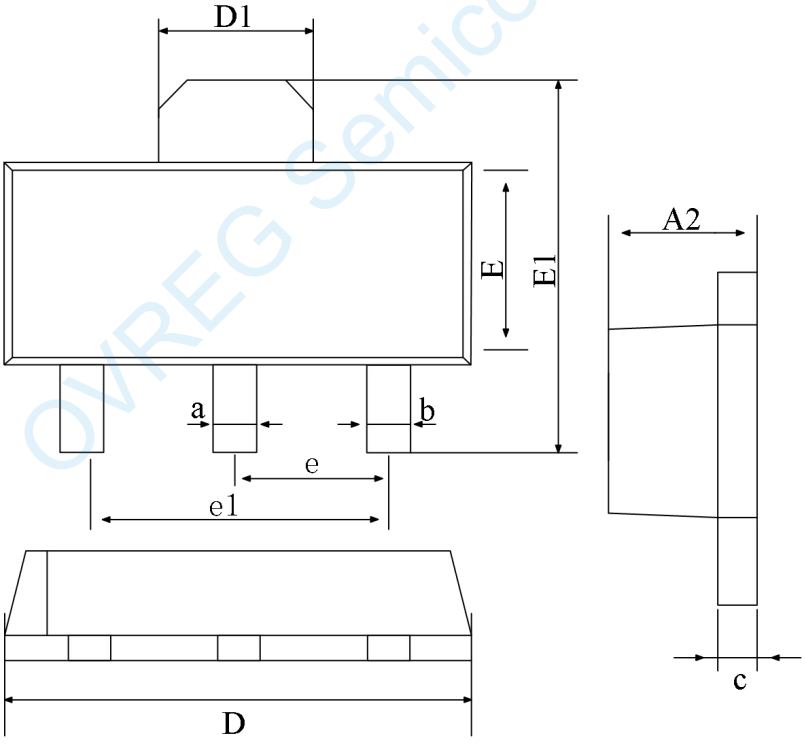

REF.	Millimeter	
	Min.	Max.
A2	1.40	1.60
a	0.40	0.58
b	0.32	0.52
c	0.36	0.46
D	4.40	4.60
D1	1.60	1.80
E	2.30	2.60
E1	4.00	4.30
e	1.00	2.00
e1	2.95	3.05

OVREG Semiconductor (Xi'an) Co.,Ltd

SOT23-5

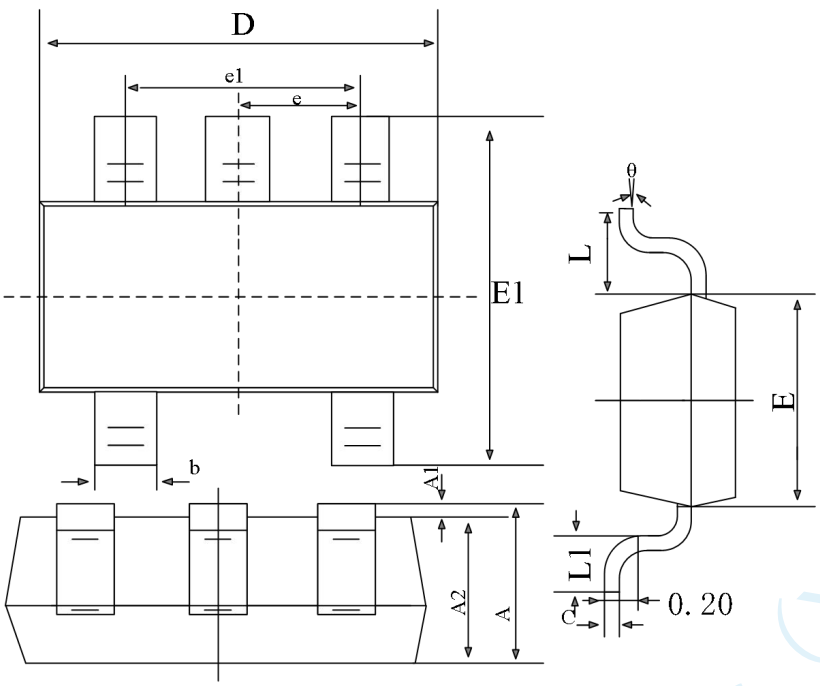

REF	Millimeter	
	Min.	Max.
A	1.05	1.25
A1	0	0.1
A2	1.05	1.15
b	0.3	0.5
c	0.1	0.2
D	2.85	3.05
E	1.5	1.7
E1	2.65	2.95
e	0.95(BSC)	
e1	1.8	2.0
L	0.3	0.6
θ	0°	8°

SOT89-5

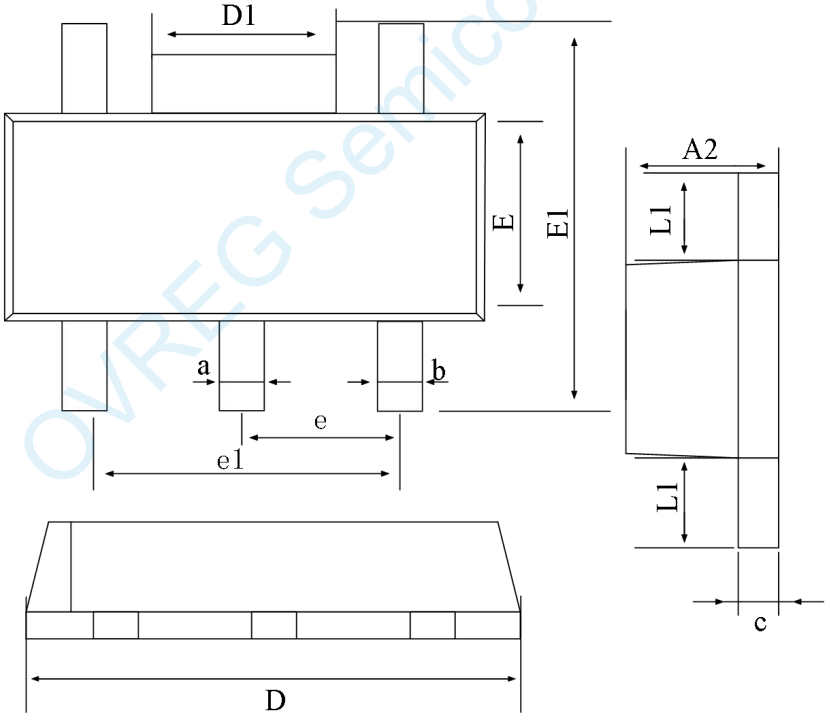

REF.	Millimeter	
	Min.	Max.
A2	1.40	1.60
a	0.45	0.55
b	0.45	0.55
c	0.36	0.46
D	4.40	4.60
D1	1.60	1.80
E	2.40	2.60
E1	4.30	4.60
e	1.00	2.00
e1	2.95	3.05
L1	0.80	1.00

OVREG Semiconductor (Xi'an) Co.,Ltd.

Ordering Information

OV1151①②③④ e.g. OV115118BM

DESIGNATOR	ITEM	SYMBOL	DESCRIPTION
①②	Output Voltage	18~	e.g. 1.8V→①=1，②=8
③	Output Accuracy	B	±2%(default)
④	Packages Type	M	SOT23-3
		F	SOT23-5
		P	SOT89-3
		Q	SOT89-5

Minimal packaging	SOT23-3 3000pcs/Reel	SOT23-5 3000pcs/Reel	SOT89-3 1000pcs/Reel	SOT89-5 1000pcs/Reel
Marking	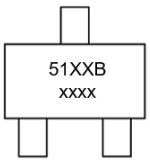	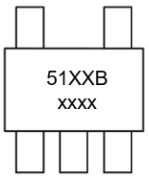	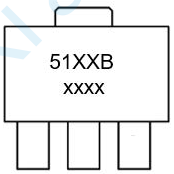	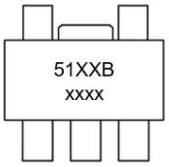
	XX：Output Voltage Code, e.g. 18 = output voltage 1.8V； xxxx：DATE CODE			

OVREG Semiconductor (Xi'an) Co.,Ltd.